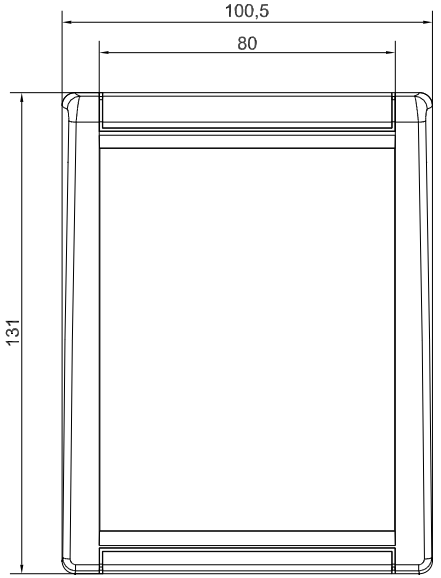

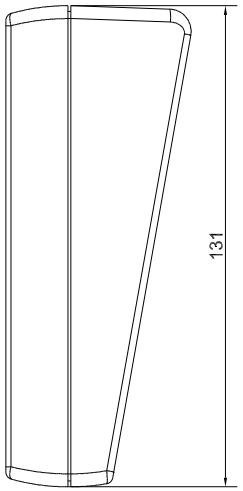

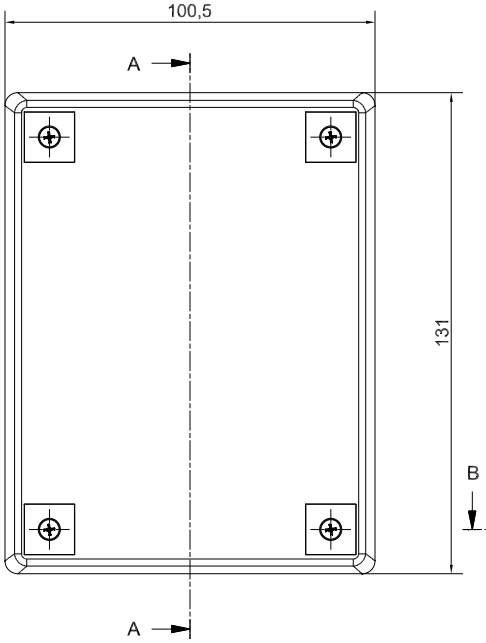

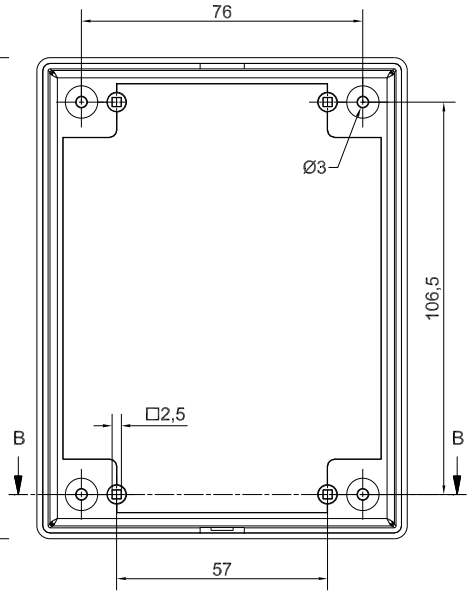

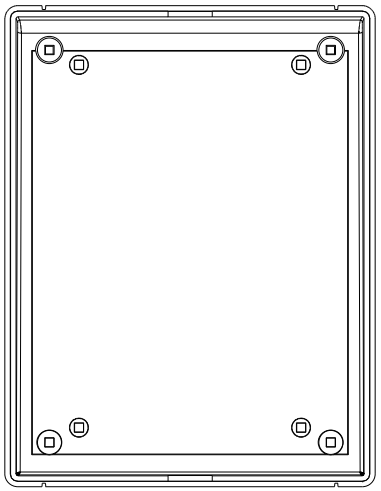

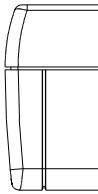

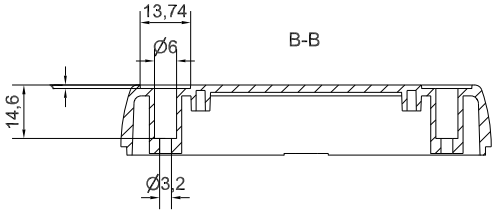

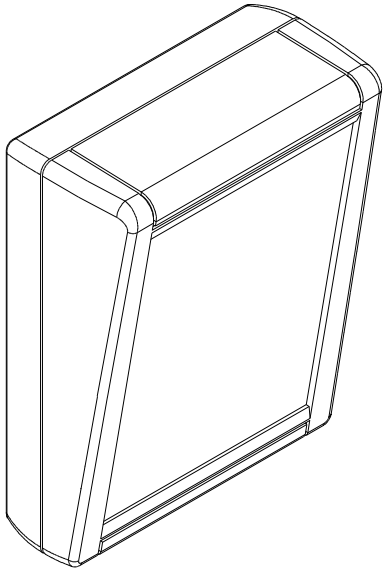

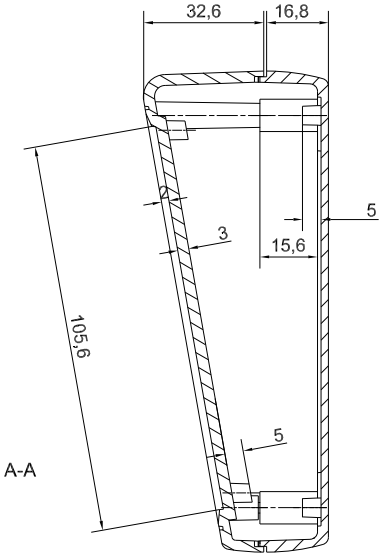

MAXIMUM PCB SIZE

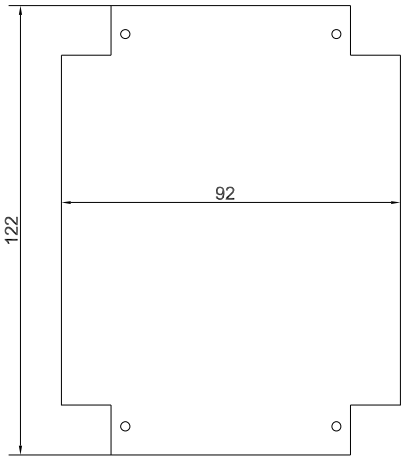

TEKO ELECTRONIC ENCLOSURES	Denomination Assembly TK-S	Part. Number TK-S
	Subject to technical modification without prior notice. Tipographical and other errors do not justify any claim for damages. All dimensions should be verified using an actual moulded part.	Rev. Index / Scale
	This document contains proprietary information of **TEKO S.p.a.** and is tendered subject to the conditions that the information be retained in confidence not be reproducer or copied and not be used or incorporated in any product.	Date 10/06/2005 / Format design A2