嘉尼企業股份有限公司 CANAL ELECTRONIC CO.,LTD.

嘉尼企業股份有限公司 研發部 2006.01.02 發圖章

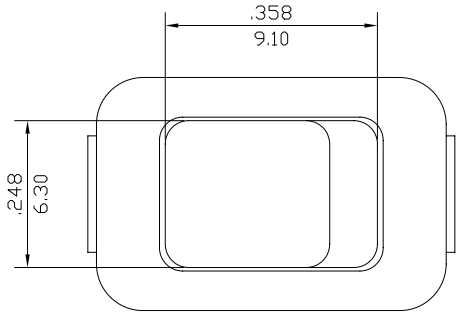

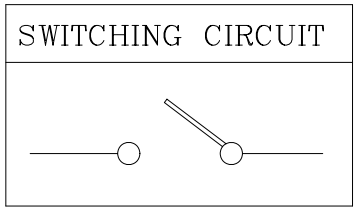

ON-OFF

ROCKER SWITCH MODEL MR-5 SERIES

RATING: 3A 250VAC (UL, CUL)
6A 125VAC (UL, CUL)
3A 250VAC~μT100 (VDE,ENEC,CQC) △3

DIELECTRIC VOLTAGE-WITHSTAND: 1,000VAC FOR 1 MINUTE

INSULATION RESISTANCE: DC 500V 100MΩ (MIN.)

CONTACT RESISTANCE: 20mΩ INITIAL (MAX.)

X	Cutout Dimension	Panel Thickness
A	$.535/13.6^{+0.00}_{-0.10}$	0.75~1.25
B	$.539/13.7^{+0.00}_{-0.10}$	1.25~2.00
C	$.543/13.8^{+0.00}_{-0.10}$	2.00~2.50

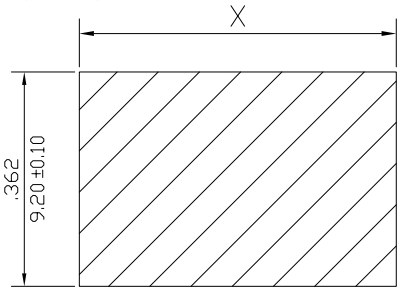

MOUNTING HOLE

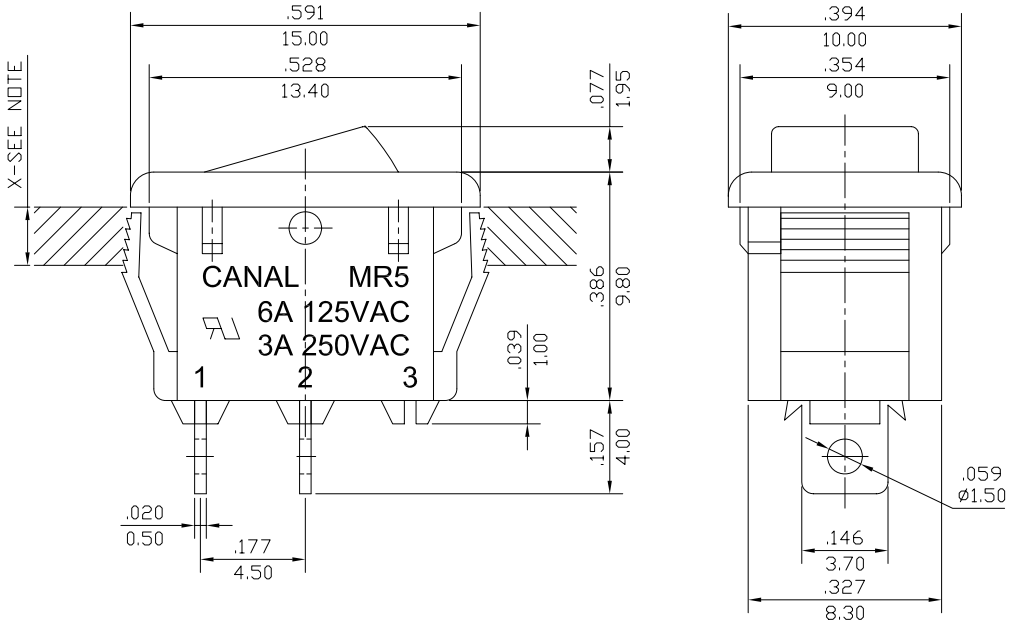

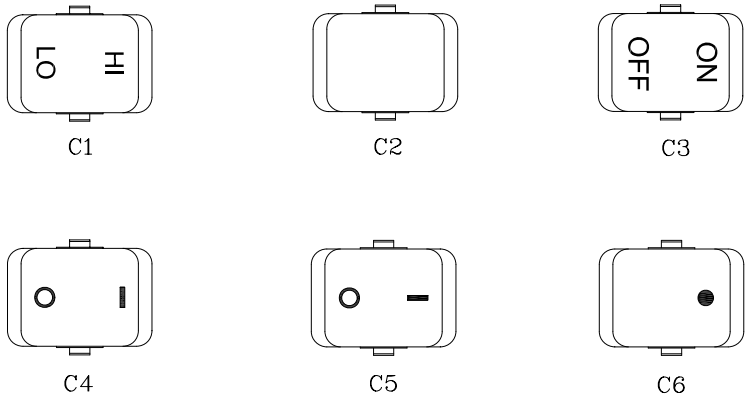

SCALE 2:3

NOTE: 1. TOLERANCES UNLESS OTHERWISE SPECIFIED: $\pm\frac{.012}{0.3}$(in/mm)

2. X MEANS FOR APPLICATION PANEL THICKNESS MUST BE UNDER 2.5mm

3. IT IS IN COMPLIANCE WITH CANAL ROHS SPELIFICATION: WI-QA-24

REVISION	DESCRIPION	REVISED BY	TOLEANCES .X±0.1 .XX±0.05 ANGLE ½°					UNIT mm	PART NAME	MR5 SPEC DRAWING	DWG NO
△			DRAWN BY	梁春林	DESIGNED BY	梁春林	SCALE	3:1			S0463C
△3 2005.12.03	修改"RATING"內容,重新出圖.	夏毅									
△2 2005.08.06	整理圖框,重新出圖	夏毅	CHECKED BY		APPROVED BY		DATE	2004.07.19	PART NO	MR5-110-F*-****-2	
△1 2004.07.19	更換圖框, 首次出圖	梁春林									