- **Featuring Unitrode L293 and L293D Products Now From Texas Instruments**
- **Wide Supply-Voltage Range: 4.5 V to 36 V**
- **Separate Input-Logic Supply**
- **Internal ESD Protection**
- **Thermal Shutdown**
- **High-Noise-Immunity Inputs**
- **Functional Replacements for SGS L293 and SGS L293D**
- **Output Current 1 A Per Channel (600 mA for L293D)**
- **Peak Output Current 2 A Per Channel (1.2 A for L293D)**
- **Output Clamp Diodes for Inductive Transient Suppression (L293D)**

N, NE PACKAGE
(TOP VIEW)

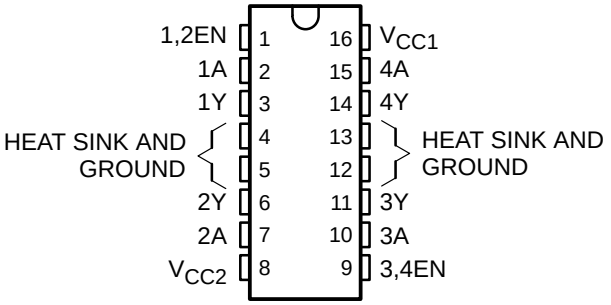

DWP PACKAGE
(TOP VIEW)

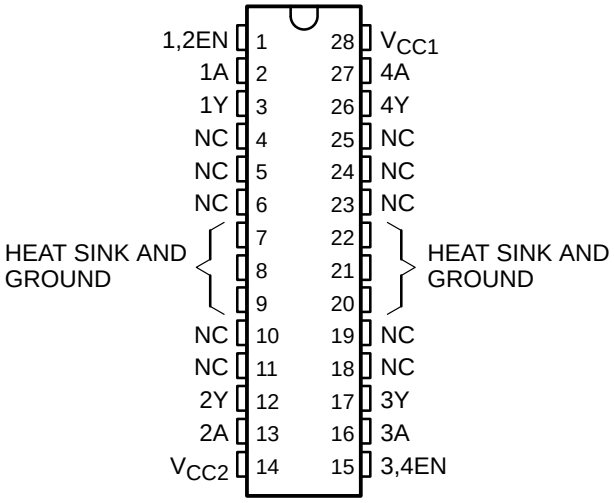

description

The L293 and L293D are quadruple high-current half-H drivers. The L293 is designed to provide bidirectional drive currents of up to 1 A at voltages from 4.5 V to 36 V. The L293D is designed to provide bidirectional drive currents of up to 600-mA at voltages from 4.5 V to 36 V. Both devices are designed to drive inductive loads such as relays, solenoids, dc and bipolar stepping motors, as well as other high-current/high-voltage loads in positive-supply applications.

All inputs are TTL compatible. Each output is a complete totem-pole drive circuit, with a Darlington transistor sink and a pseudo-Darlington source. Drivers are enabled in pairs, with drivers 1 and 2 enabled by 1,2EN and drivers 3 and 4 enabled by 3,4EN. When an enable input is high, the associated drivers are enabled and their outputs are active and in phase with their inputs. When the enable input is low, those drivers are disabled and their outputs are off and in the high-impedance state. With the proper data inputs, each pair of drivers forms a full-H (or bridge) reversible drive suitable for solenoid or motor applications.

On the L293, external high-speed output clamp diodes should be used for inductive transient suppression.

A V_{CC1} terminal, separate from V_{CC2}, is provided for the logic inputs to minimize device power dissipation.

The L293and L293D are characterized for operation from 0°C to 70°C.

Please be aware that an important notice concerning availability, standard warranty, and use in critical applications of Texas Instruments semiconductor products and disclaimers thereto appears at the end of this data sheet.

PRODUCTION DATA information is current as of publication date. Products conform to specifications per the terms of Texas Instruments standard warranty. Production processing does not necessarily include testing of all parameters.

Copyright © 2002, Texas Instruments Incorporated

block diagram

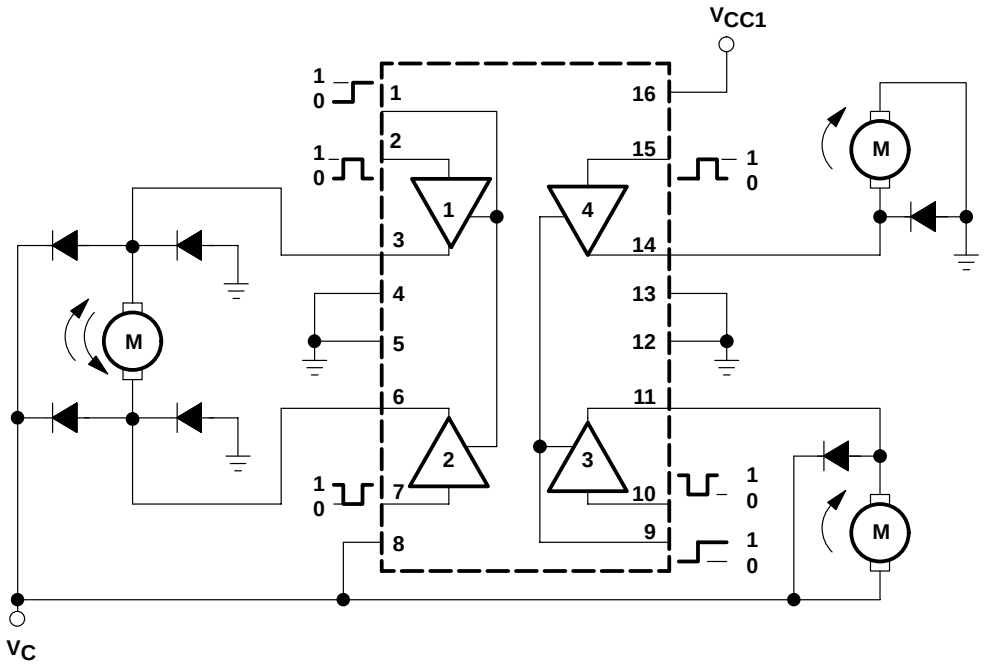

NOTE: Output diodes are internal in L293D.

TEXAS INSTRUMENTS AVAILABLE OPTIONS

T_A	PACKAGE
	PLASTIC DIP (NE)
0°C to 70°C	L293NE L293DNE

Unitrode Products from Texas Instruments

AVAILABLE OPTIONS

T_A	PACKAGED DEVICES	
	SMALL OUTLINE (DWP)	PLASTIC DIP (N)
0°C to 70°C	L293DWP L293DDWP	L293N L293DN

The DWP package is available taped and reeled. Add the suffix TR to device type (e.g., L293DWPTR).

FUNCTION TABLE
(each driver)

INPUTS†		OUTPUT
A	EN	Y
H	H	H
L	H	L
X	L	Z

H = high level, L = low level, X = irrelevant, Z = high impedance (off)

† In the thermal shutdown mode, the output is in the high-impedance state, regardless of the input levels.

logic diagram

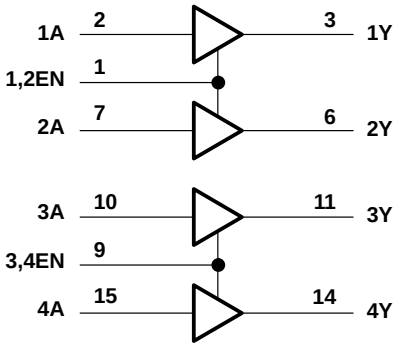

schematics of inputs and outputs (L293)

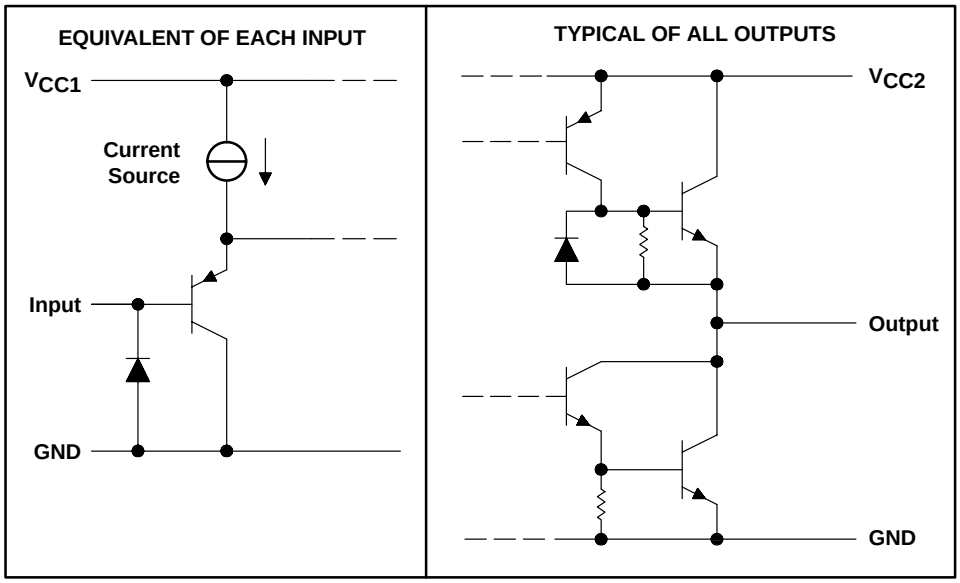

schematics of inputs and outputs (L293D)

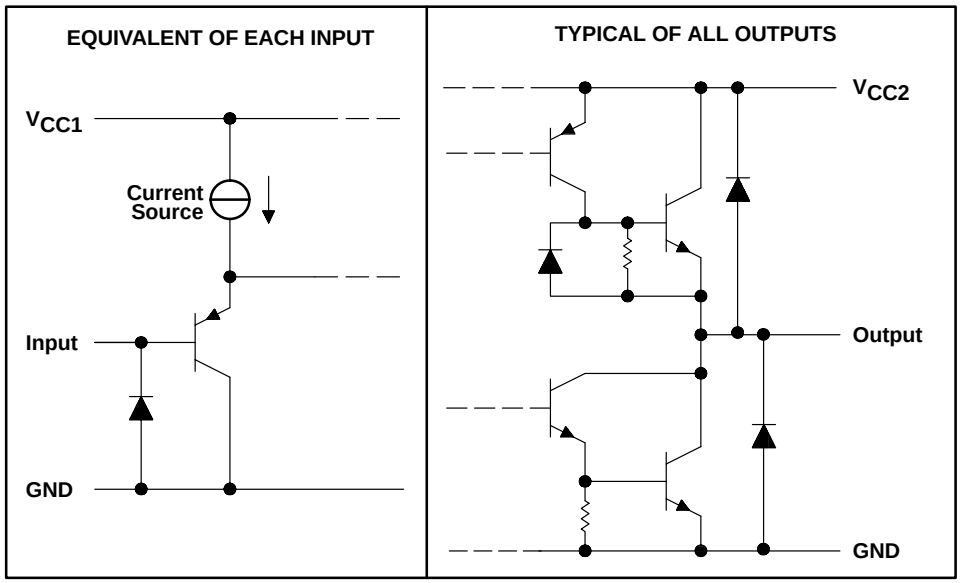

absolute maximum ratings over operating free-air temperature range (unless otherwise noted)†

Supply voltage, V_{CC1} (see Note 1)	36 V
Output supply voltage, V_{CC2}	36 V
Input voltage, V_I	7 V
Output voltage range, V_O	–3 V to V_{CC2} + 3 V
Peak output current, I_O (nonrepetitive, t ≤ 5 ms): L293	±2 A
Peak output current, I_O (nonrepetitive, t ≤ 100 µs): L293D	±1.2 A
Continuous output current, I_O: L293	±1 A
Continuous output current, I_O: L293D	±600 mA
Continuous total dissipation at (or below) 25°C free-air temperature (see Notes 2 and 3)	2075 mW
Continuous total dissipation at 80°C case temperature (see Note 3)	5000 mW
Maximum junction temperature, T_J	150°C
Lead temperature 1,6 mm (1/16 inch) from case for 10 seconds	260°C
Storage temperature range, T_{stg}	–65°C to 150°C

† Stresses beyond those listed under “absolute maximum ratings” may cause permanent damage to the device. These are stress ratings only, and functional operation of the device at these or any other conditions beyond those indicated under “recommended operating conditions” is not implied. Exposure to absolute-maximum-rated conditions for extended periods may affect device reliability.

NOTES:
1. All voltage values are with respect to the network ground terminal.
2. For operation above 25°C free-air temperature, derate linearly at the rate of 16.6 mW/°C.
3. For operation above 25°C case temperature, derate linearly at the rate of 71.4 mW/°C. Due to variations in individual device electrical characteristics and thermal resistance, the built-in thermal overload protection may be activated at power levels slightly above or below the rated dissipation.

recommended operating conditions

			MIN	MAX	UNIT
	Supply voltage	V_{CC1}	4.5	7	V
		V_{CC2}	V_{CC1}	36	
V_{IH}	High-level input voltage	$V_{CC1} \le 7$ V	2.3	V_{CC1}	V
		$V_{CC1} \ge 7$ V	2.3	7	V
V_{IL}	Low-level output voltage		–0.3†	1.5	V
T_A	Operating free-air temperature		0	70	°C

† The algebraic convention, in which the least positive (most negative) designated minimum, is used in this data sheet for logic voltage levels.

electrical characteristics, V_{CC1} = 5 V, V_{CC2} = 24 V, T_A = 25°C

PARAMETER			TEST CONDITIONS		MIN	TYP	MAX	UNIT
V_{OH}	High-level output voltage		L293: $I_{OH} = -1$ A L293D: $I_{OH} = -0.6$ A		V_{CC2}–1.8	V_{CC2}–1.4		V
V_{OL}	Low-level output voltage		L293: $I_{OL} = 1$ A L293D: $I_{OL} = 0.6$ A			1.2	1.8	V
V_{OKH}	High-level output clamp voltage		L293D: $I_{OK} = -0.6$ A			V_{CC2} + 1.3		V
V_{OKL}	Low-level output clamp voltage		L293D: $I_{OK} = 0.6$ A			1.3		V
I_{IH}	High-level input current	A	$V_I = 7$ V			0.2	100	µA
		EN				0.2	10	
I_{IL}	Low-level input current	A	$V_I = 0$			–3	–10	µA
		EN				–2	–100	
I_{CC1}	Logic supply current		$I_O = 0$	All outputs at high level		13	22	mA
				All outputs at low level		35	60	
				All outputs at high impedance		8	24	
I_{CC2}	Output supply current		$I_O = 0$	All outputs at high level		14	24	mA
				All outputs at low level		2	6	
				All outputs at high impedance		2	4	

switching characteristics, V_{CC1} = 5 V, V_{CC2} = 24 V, T_A = 25°C

PARAMETER		TEST CONDITIONS	L293NE, L293DNE			UNIT
			MIN	TYP	MAX	
t_{PLH}	Propagation delay time, low-to-high-level output from A input	$C_L = 30$ pF, See Figure 1		800		ns
t_{PHL}	Propagation delay time, high-to-low-level output from A input			400		ns
t_{TLH}	Transition time, low-to-high-level output			300		ns
t_{THL}	Transition time, high-to-low-level output			300		ns

switching characteristics, V_{CC1} = 5 V, V_{CC2} = 24 V, T_A = 25°C

PARAMETER		TEST CONDITIONS	L293DWP, L293N L293DDWP, L293DN			UNIT
			MIN	TYP	MAX	
t_{PLH}	Propagation delay time, low-to-high-level output from A input	$C_L = 30$ pF, See Figure 1		750		ns
t_{PHL}	Propagation delay time, high-to-low-level output from A input			200		ns
t_{TLH}	Transition time, low-to-high-level output			100		ns
t_{THL}	Transition time, high-to-low-level output			350		ns

PARAMETER MEASUREMENT INFORMATION

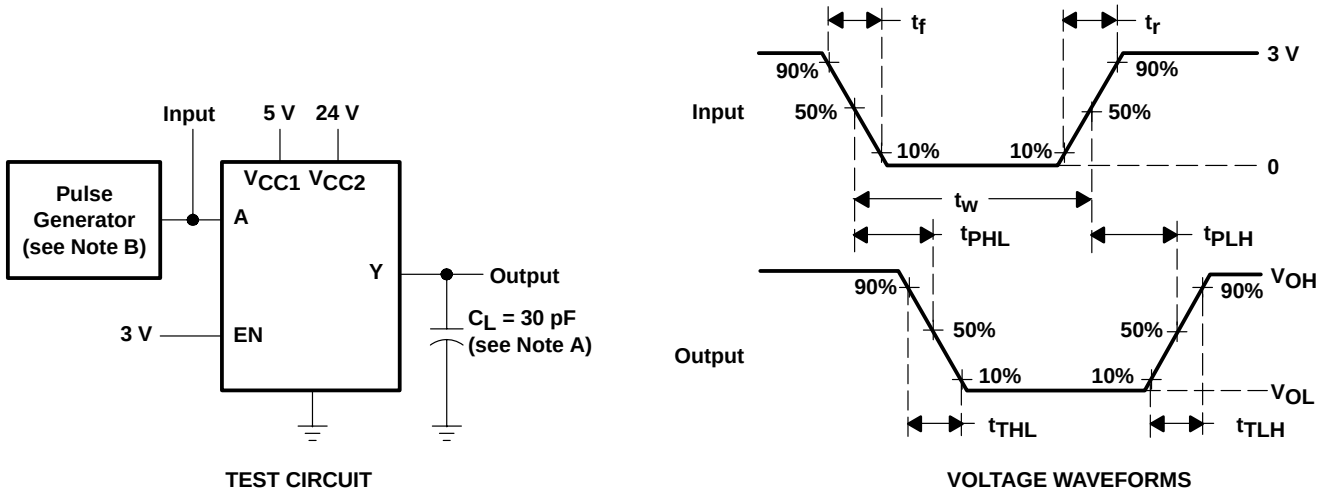

NOTES: A. C_L includes probe and jig capacitance.
B. The pulse generator has the following characteristics: $t_r \leq 10$ ns, $t_f \leq 10$ ns, $t_W = 10$ µs, PRR = 5 kHz, $Z_O = 50\ \Omega$.

Figure 1. Test Circuit and Voltage Waveforms

APPLICATION INFORMATION

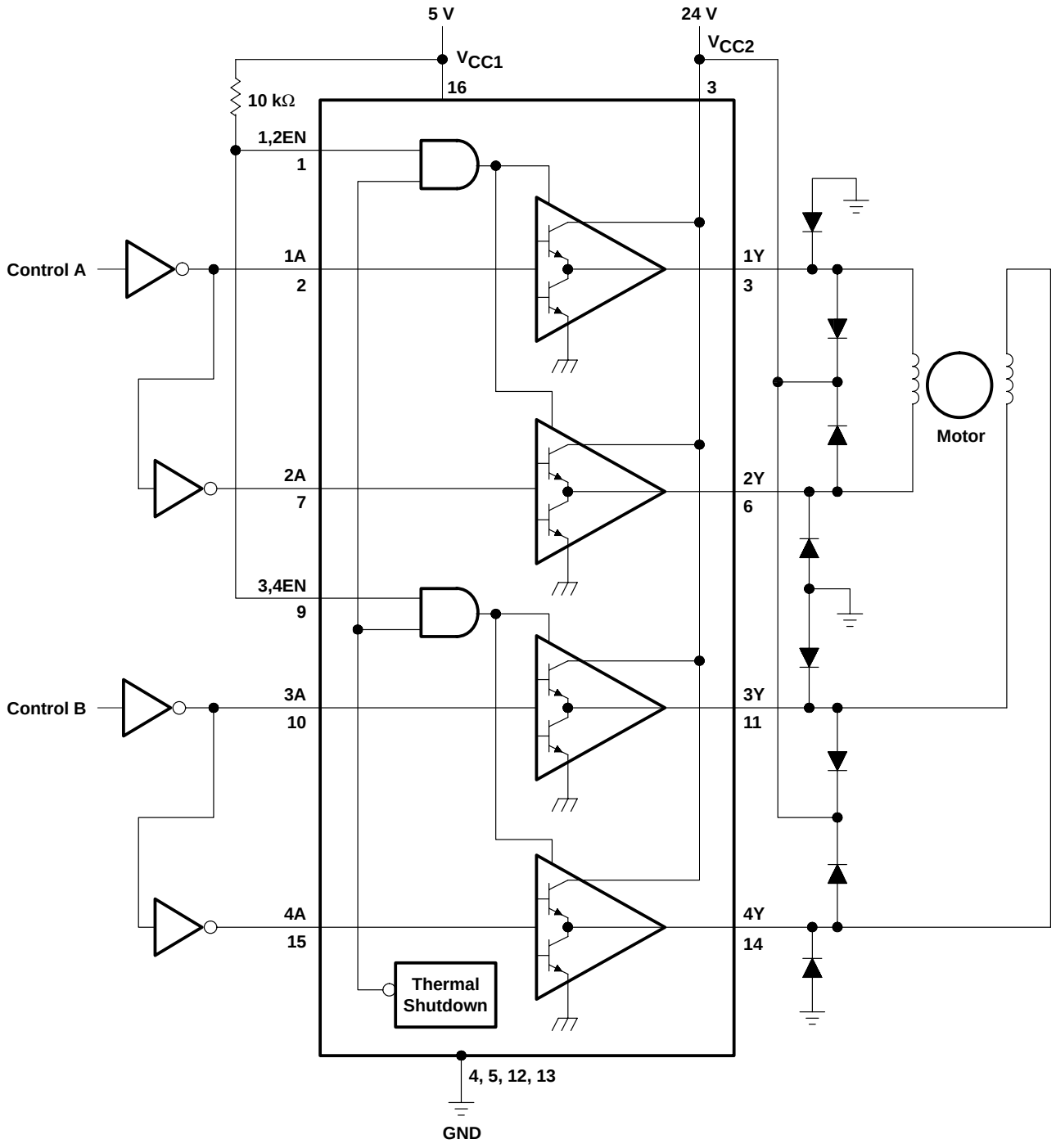

Figure 2. Two-Phase Motor Driver (L293)

APPLICATION INFORMATION

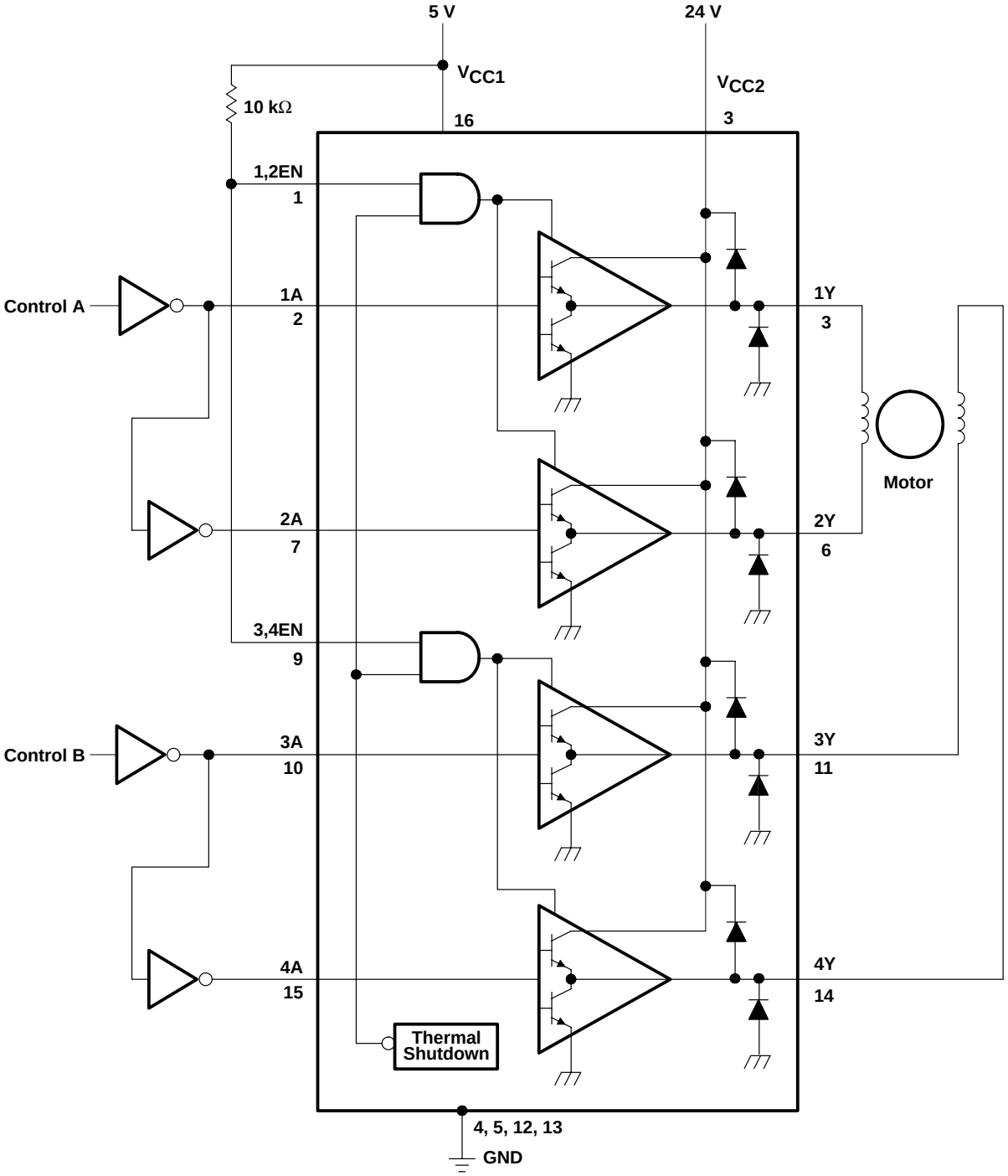

Figure 3. Two-Phase Motor Driver (L293D)

APPLICATION INFORMATION

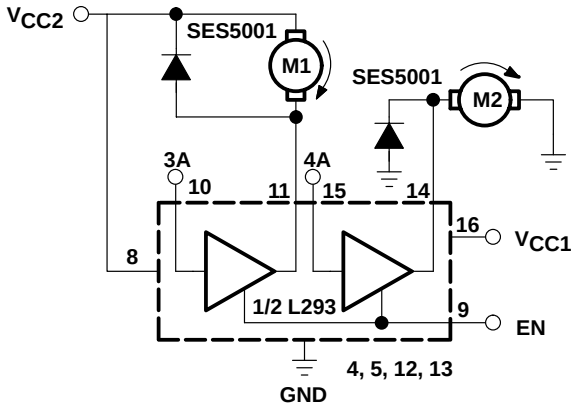

Figure 4. DC Motor Controls (connections to ground and to supply voltage)

EN	3A	M1	4A	M2
H	H	Fast motor stop	H	Run
H	L	Run	L	Fast motor stop
L	X	Free-running motor stop	X	Free-running motor stop

L = low, H = high, X = don't care

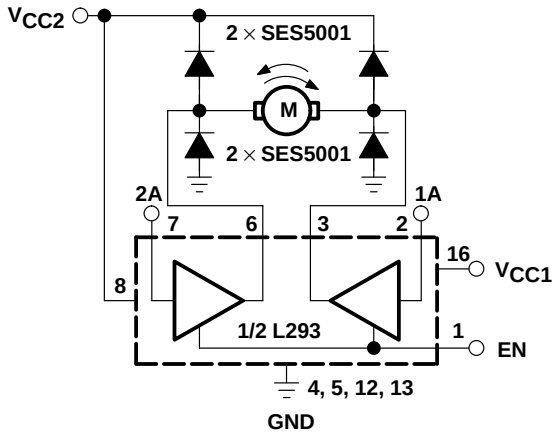

Figure 5. Bidirectional DC Motor Control

EN	1A	2A	FUNCTION
H	L	H	Turn right
H	H	L	Turn left
H	L	L	Fast motor stop
H	H	H	Fast motor stop
L	X	X	Fast motor stop

L = low, H = high, X = don't care

APPLICATION INFORMATION

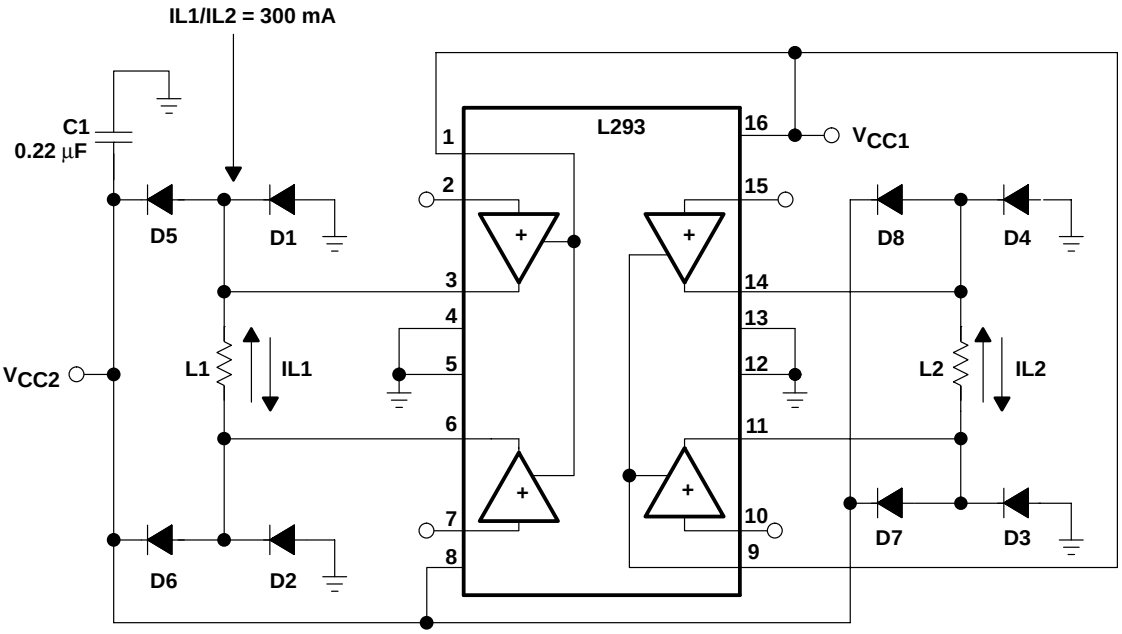

D1–D8 = SES5001

Figure 6. Bipolar Stepping-Motor Control

mounting instructions

The Rthj-amp of the L293 can be reduced by soldering the GND pins to a suitable copper area of the printed circuit board or to an external heatsink.

Figure 9 shows the maximum package power P_{TOT} and the θ_{JA} as a function of the side ℓ of two equal square copper areas having a thickness of 35 µm (see Figure 7). In addition, an external heat sink can be used (see Figure 8).

During soldering, the pin temperature must not exceed 260°C, and the soldering time must not be longer than 12 seconds.

The external heatsink or printed circuit copper area must be connected to electrical ground.

APPLICATION INFORMATION

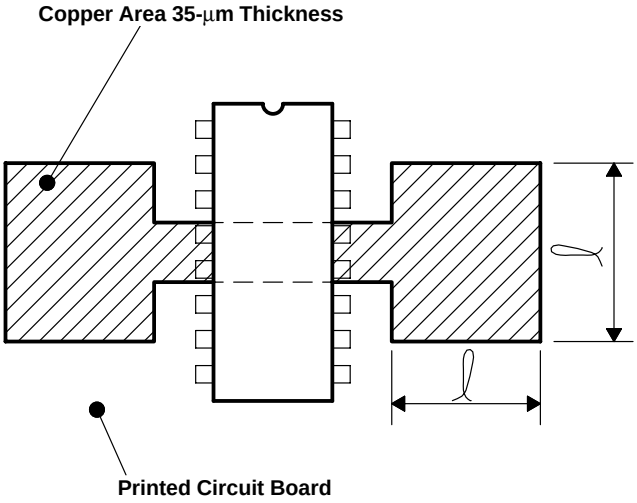

Figure 7. Example of Printed Circuit Board Copper Area (used as heat sink)

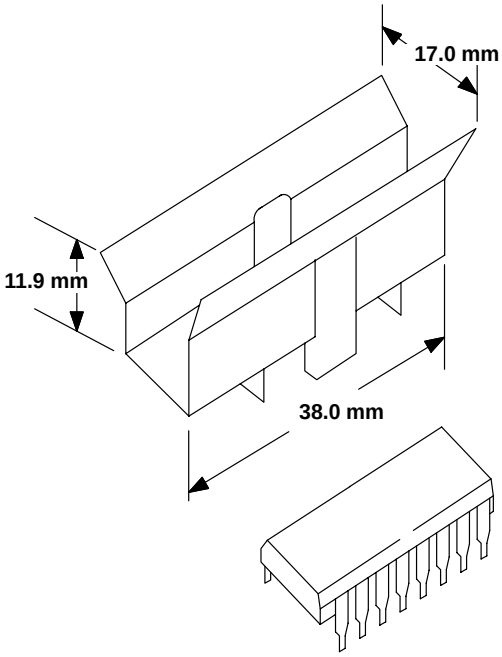

Figure 8. External Heat Sink Mounting Example (θ_{JA} = 25°C/W)

APPLICATION INFORMATION

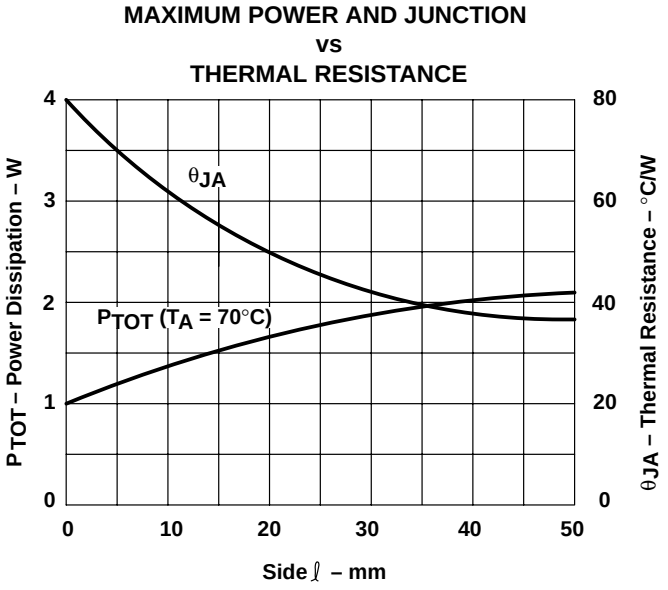

Figure 9

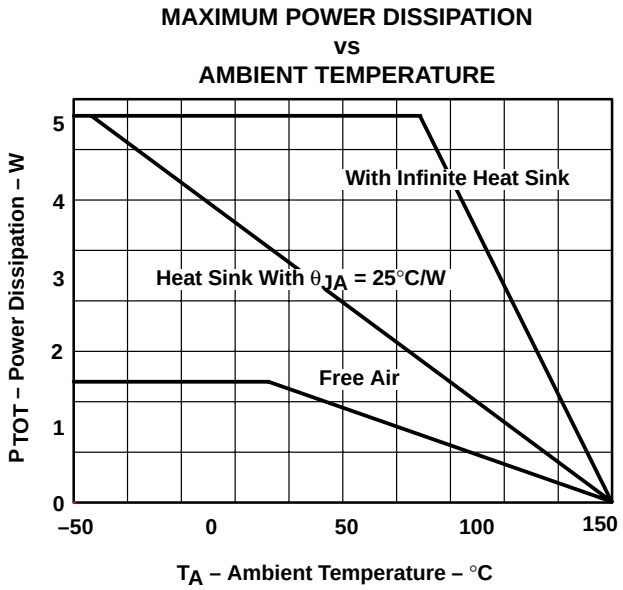

Figure 10

IMPORTANT NOTICE

Texas Instruments Incorporated and its subsidiaries (TI) reserve the right to make corrections, modifications, enhancements, improvements, and other changes to its products and services at any time and to discontinue any product or service without notice. Customers should obtain the latest relevant information before placing orders and should verify that such information is current and complete. All products are sold subject to TI's terms and conditions of sale supplied at the time of order acknowledgment.

TI warrants performance of its hardware products to the specifications applicable at the time of sale in accordance with TI's standard warranty. Testing and other quality control techniques are used to the extent TI deems necessary to support this warranty. Except where mandated by government requirements, testing of all parameters of each product is not necessarily performed.

TI assumes no liability for applications assistance or customer product design. Customers are responsible for their products and applications using TI components. To minimize the risks associated with customer products and applications, customers should provide adequate design and operating safeguards.

TI does not warrant or represent that any license, either express or implied, is granted under any TI patent right, copyright, mask work right, or other TI intellectual property right relating to any combination, machine, or process in which TI products or services are used. Information published by TI regarding third–party products or services does not constitute a license from TI to use such products or services or a warranty or endorsement thereof. Use of such information may require a license from a third party under the patents or other intellectual property of the third party, or a license from TI under the patents or other intellectual property of TI.

Reproduction of information in TI data books or data sheets is permissible only if reproduction is without alteration and is accompanied by all associated warranties, conditions, limitations, and notices. Reproduction of this information with alteration is an unfair and deceptive business practice. TI is not responsible or liable for such altered documentation.

Resale of TI products or services with statements different from or beyond the parameters stated by TI for that product or service voids all express and any implied warranties for the associated TI product or service and is an unfair and deceptive business practice. TI is not responsible or liable for any such statements.

Mailing Address:

Texas Instruments
Post Office Box 655303
Dallas, Texas 75265

Copyright © 2002, Texas Instruments Incorporated

This datasheet has been download from:

www.datasheetcatalog.com

Datasheets for electronics components.