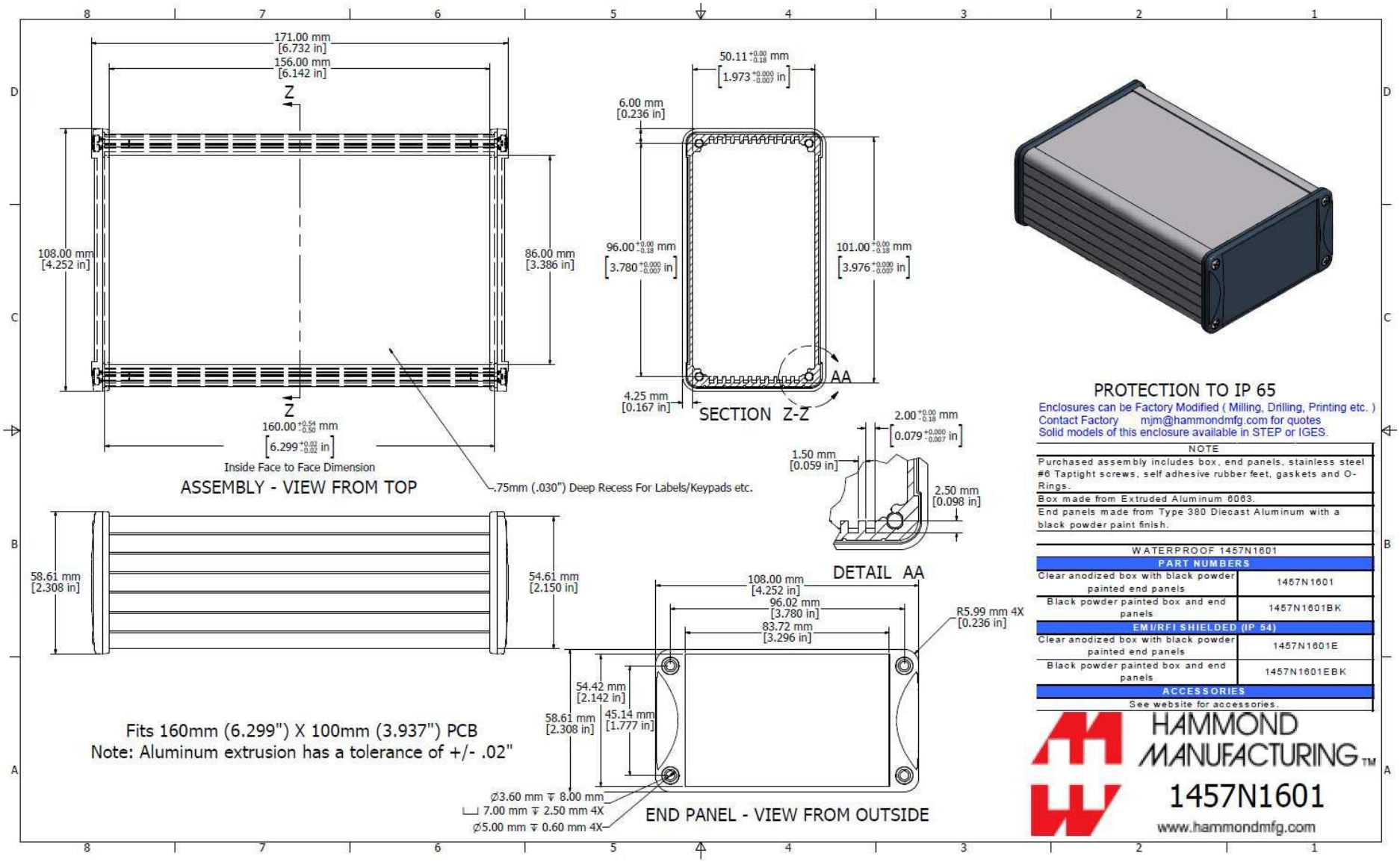
171.00 mm [6.732 in]
156.00 mm [6.142 in]
Z
108.00 mm [4.252 in]
86.00 mm [3.386 in]
160.00 +0.54 -0.50 mm [6.299 +0.02 -0.02 in]
Inside Face to Face Dimension
ASSEMBLY - VIEW FROM TOP
.75mm (.030") Deep Recess For Labels/Keypads etc.
50.11 +0.00 -0.18 mm [1.973 +0.000 -0.007 in]
6.00 mm [0.236 in]
96.00 +0.00 -0.18 mm [3.780 +0.000 -0.007 in]
101.00 +0.00 -0.18 mm [3.976 +0.000 -0.007 in]
4.25 mm [0.167 in]
AA
SECTION Z-Z
2.00 +0.00 -0.18 mm [0.079 +0.000 -0.007 in]
1.50 mm [0.059 in]
2.50 mm [0.098 in]
DETAIL AA
58.61 mm [2.308 in]
54.61 mm [2.150 in]
108.00 mm [4.252 in]
96.02 mm [3.780 in]
83.72 mm [3.296 in]
R5.99 mm 4X [0.236 in]
54.42 mm [2.142 in]
58.61 mm [2.308 in]
45.14 mm [1.777 in]
Fits 160mm (6.299") X 100mm (3.937") PCB
Note: Aluminum extrusion has a tolerance of +/- .02"
⌀3.60 mm ↧ 8.00 mm
⌴ 7.00 mm ↧ 2.50 mm 4X
⌀5.00 mm ↧ 0.60 mm 4X
END PANEL - VIEW FROM OUTSIDE
PROTECTION TO IP 65
Enclosures can be Factory Modified (Milling, Drilling, Printing etc.)
Contact Factory mjm@hammondmfg.com for quotes
Solid models of this enclosure available in STEP or IGES.
NOTE
Purchased assembly includes box, end panels, stainless steel #6 Taptight screws, self adhesive rubber feet, gaskets and O-Rings.
Box made from Extruded Aluminum 6063.
End panels made from Type 380 Diecast Aluminum with a black powder paint finish.
WATERPROOF 1457N1601
PART NUMBERS
Clear anodized box with black powder painted end panels 1457N1601
Black powder painted box and end panels 1457N1601BK
EMI/RFI SHIELDED (IP 54)
Clear anodized box with black powder painted end panels 1457N1601E
Black powder painted box and end panels 1457N1601EBK
ACCESSORIES
See website for accessories.
HAMMOND MANUFACTURING™
1457N1601
www.hammondmfg.com