REV.	ECN.NO	DATE	DRAW	APPROVE
				卓

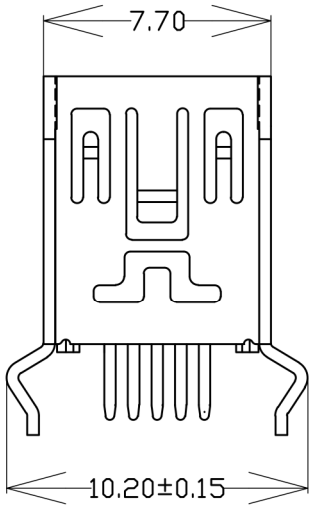

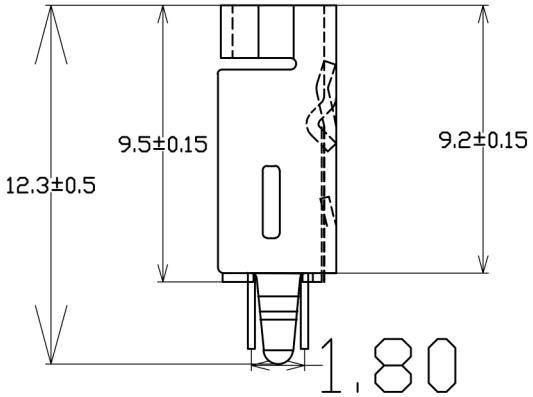

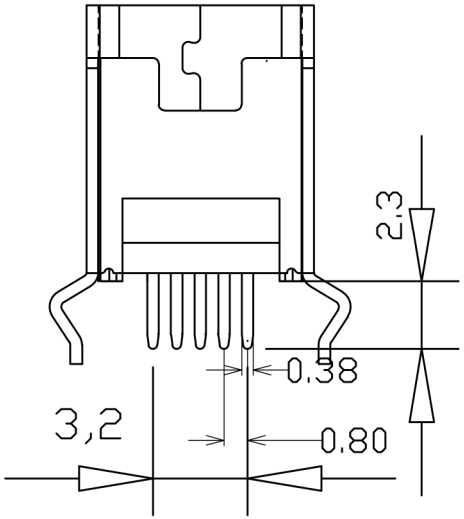

特性：Specifications:
电器：Electrical:
接触阻抗：Contact Resistance
30 milliohms Max
耐电压：Dielectric Withstanding Voltage:
500V AC Sea Levol
绝缘阻抗：Insulation Resistance:
100 MEGA ohms MIN
材料：Matorial:
塑胶Housing:Hing Temperature Thermplastics.
LCP 耐高温塑胶
端子：Contact: Copper Alloy铜合金
铜壳Shell:Copper Alloy 铜合金
电镀Finish:
端子Contact:Piated Gold In Mating Area:
Tin On Slder Talls
接触点镀金。脚镀锡
铜壳：Shell:
Nickel/Plating 镀镍

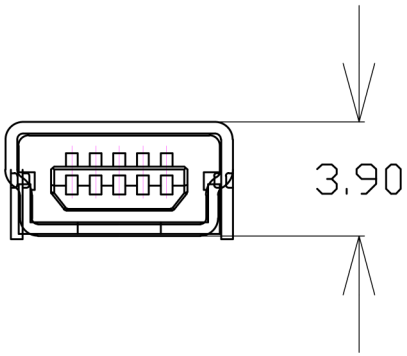

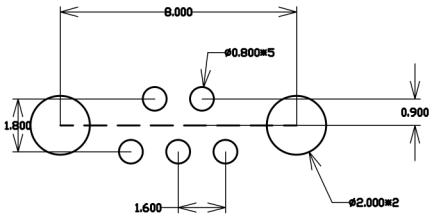

Recommended PCB Layout

TOLERANCE UNLESS OTHERWISE SPECIFIED .X±0.30 .XX±0.20 .XXX±0.10 X.° ± 1°		Wellco T&C Co., Ltd.					
DRAWING		TITLE	MINI USB5P180度直插弯脚				
CHECKED							
APPROVED		P/N	ZT-MUB05F080-100			REV.	A/0
DATE	09/11/16	UNIT	MM	SCALE	4:1	PROJECTION	