WH9011AK-1-18T □□□□□□□□□□□

(WH9011AK-1-18T ROTARY POTENTIOMETERS WITH METAL SHAFT)

□□□□ □□□□□□□□□□□□□□□□□□□General

□□□□□□□□□□□□□□□□□

□□ □□□□□□□□Features

□□□□□□□□-10º□100º	for electronic equipment. -Operating temperature□-10º□100º
□□□□□□□□□□□□□□□□□□□□□□□□□□	-Insert molding with resin around the around the resistor prevents flux build-up
□□□□□□ 9.5mm,□□□□□□	-Small,only9.5mm wide

□□ □□□□□□□□□□□□□□□□□□□□□□□Applications

□□□□□DVD,□□□□□	-Computer speaker, DVD,Car stereos etc

□□□□□□□□□ OUTLINE DRAWING AND MOUNTING HOLE DETAIL

TEL:0086-0519-86461533□86488093□86471236□□ FAX:0086-0519-86462341 □ E-MAIL:Fen@china-spike.com
ADD:Miaoqiao,Wujin High-new Technology District,Changzhou City,Jiangsu Prov.China http://www.czkennon.com
□□:□□□□□□□□□□□□□□□□□□□□□□□(□□)

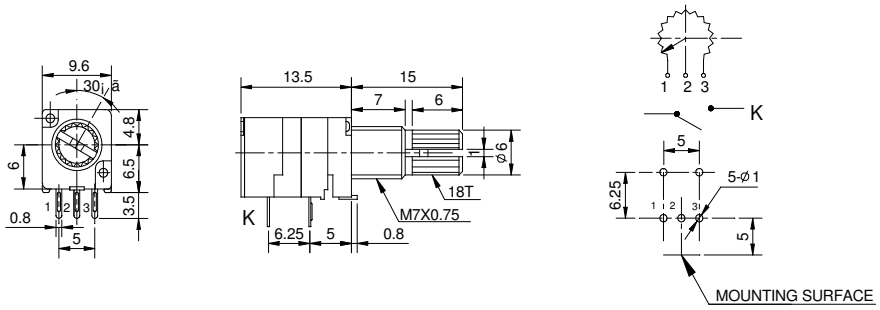

□□□□□CHARACTERISTICS

□□ ITEM		□□ SPECIFICATION
□□□□ **Electrical Characteristics**	□□□□□□ 70℃□□Rated Power□at 70℃□	B:0.05W □A□C:0.033W
	□□□□□□ Max Operation Voltage	Curve B:AC50V□ Other curve B:AC25V
	□□□□□Insulation Resistance	More than 100MΩ at DC250V
	□□□□□□□Switch rating	DC 16V 1A
	□□□□□□ Switch contact resistance	Less than 50mΩ
	□□□□□Dielectric	AC 300V,1minute
	□□□□□Rotational Noise	≤47mv
	□□□□□□ Allow Desistance Tolerance	±20%
	□□□□□Terminal resistance	10Ωmax
	□□□□ Resistance Law	A(lin)□B(log)□C(Alog)
	□□□□ Residual Resistance	R≥250KΩ 0.1%max.of total resistance
		250 KΩ>R>10 KΩ 20Ωmax

TEL:0086-0519-86461533□86488093□86471236□□ FAX:0086-0519-86462341 □ E-MAIL:Fen@china-spike.com
ADD:Miaoqiao,Wujin High-new Technology District,Changzhou City,Jiangsu Prov.China http://www.czkennon.com
□□:□□□□□□□□□□□□□□□□□□□□□□□□□(□□)

		10 KΩ≥R 10Ωmax
	□□□□Total Resistance	50K
□□□□ **Mechanical Characteristics**	□□□□ Rotational Torque	5□25mN.m□50□250gf.cm□
	□□□□ Total Rotational Angle	300°± 10°
	□□□□□Shaft Stop Strength	0.4N.m□(4Kgf.cm)
	□□□□□□□Switch Working Angle	≤50°Max
	□□□□□/□□ Switch Working Force/Torque	5□30 mN.m
	C.C.□□□Click Position	0/32/40detent
	□□□□ Mechanical Life	10,000 cycles
□□ Soldering		□□ T≤260ºC: □□ t≤10s

TEL:0086-0519-86461533□86488093□86471236□□ FAX:0086-0519-86462341 □ E-MAIL:Fen@china-spike.com
ADD:Miaoqiao,Wujin High-new Technology District,Changzhou City,Jiangsu Prov.China http://www.czkennon.com
□□:□□□□□□□□□□□□□□□□□□□□□□□□□(□□)