**KLS P/N: M20HJX1-3**

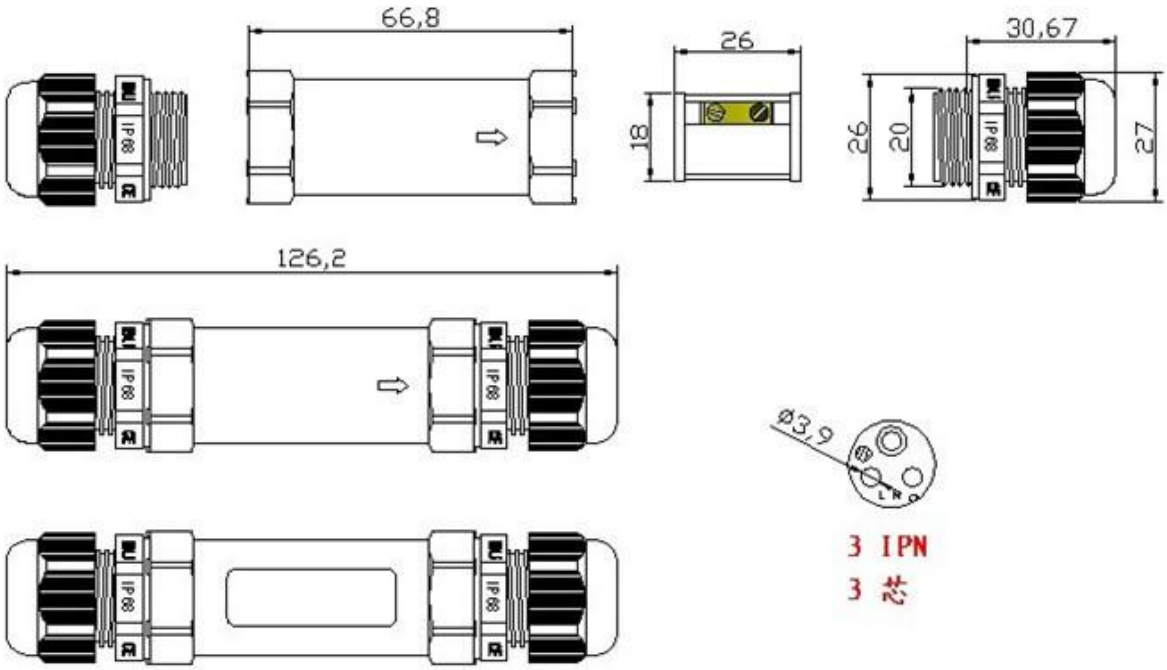

1: appearance and environment description

1.1 the reference outline dimensions (length x width x height) (mm) : will be subject to physical (drawings are for reference only).

1.2 use environmental conditions

Working temperature: - 45 ℃, 105 ℃ storage temperature: - 45 ℃ to 105 ℃

Waterproof level: IP68 rated current 25 a

6 and 12 mm line diameter for cable some conclusions: 1, 2, 3

孔径：3mm
长 14mm

1、锥度嘴随着尾螺帽的拧进而缩小

2、未拧紧前，有空隙
3、拧紧后，抱紧防水