guide pin

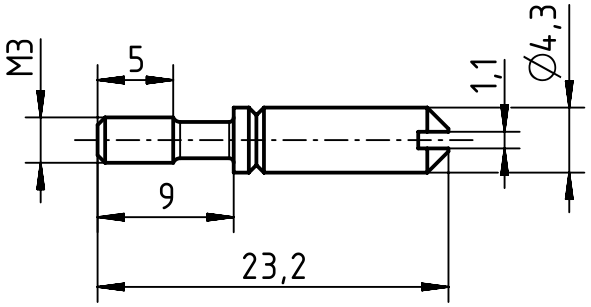

guide bush

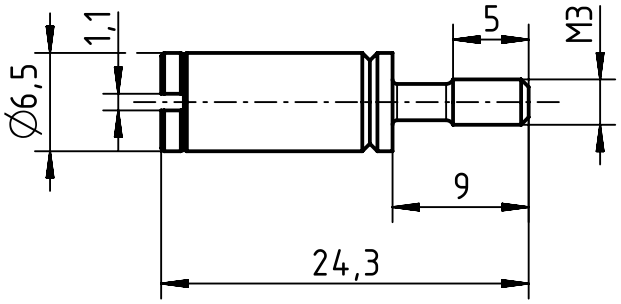

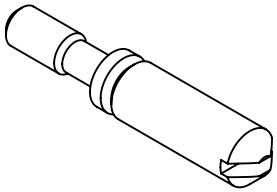

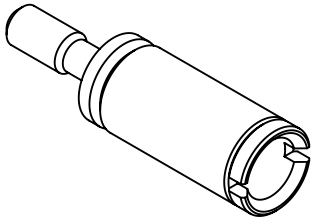

arrangement of pins and bushes see page 2 and 3

09 14 000 9909	guide bush
09 14 000 9908	guide pin
part number	description

All Dimensions in mm
Original Size DIN A4

Scale 2:1

Free size tol.

Ref.

Sub.

All rights reserved

Department EL PD - DE

HARTING Electric GmbH & Co. KG
D-32339 Espelkamp

Created by	Inspected by	Standardisation	Date	State
KLASSENP	BERGHORN	TIEMANNA	2017-01-16	Final Release

Title Han-Modular Fuehrungsstifte

Doc-Key / ECM-Nr.
100175794/UGD/003/D
500000113697

Type TB

Number 09 14 000 990X

Rev. D

Page 1/3

A4

coding system with guide pins and bushes

for hoods/housings with one frame or hinged frame

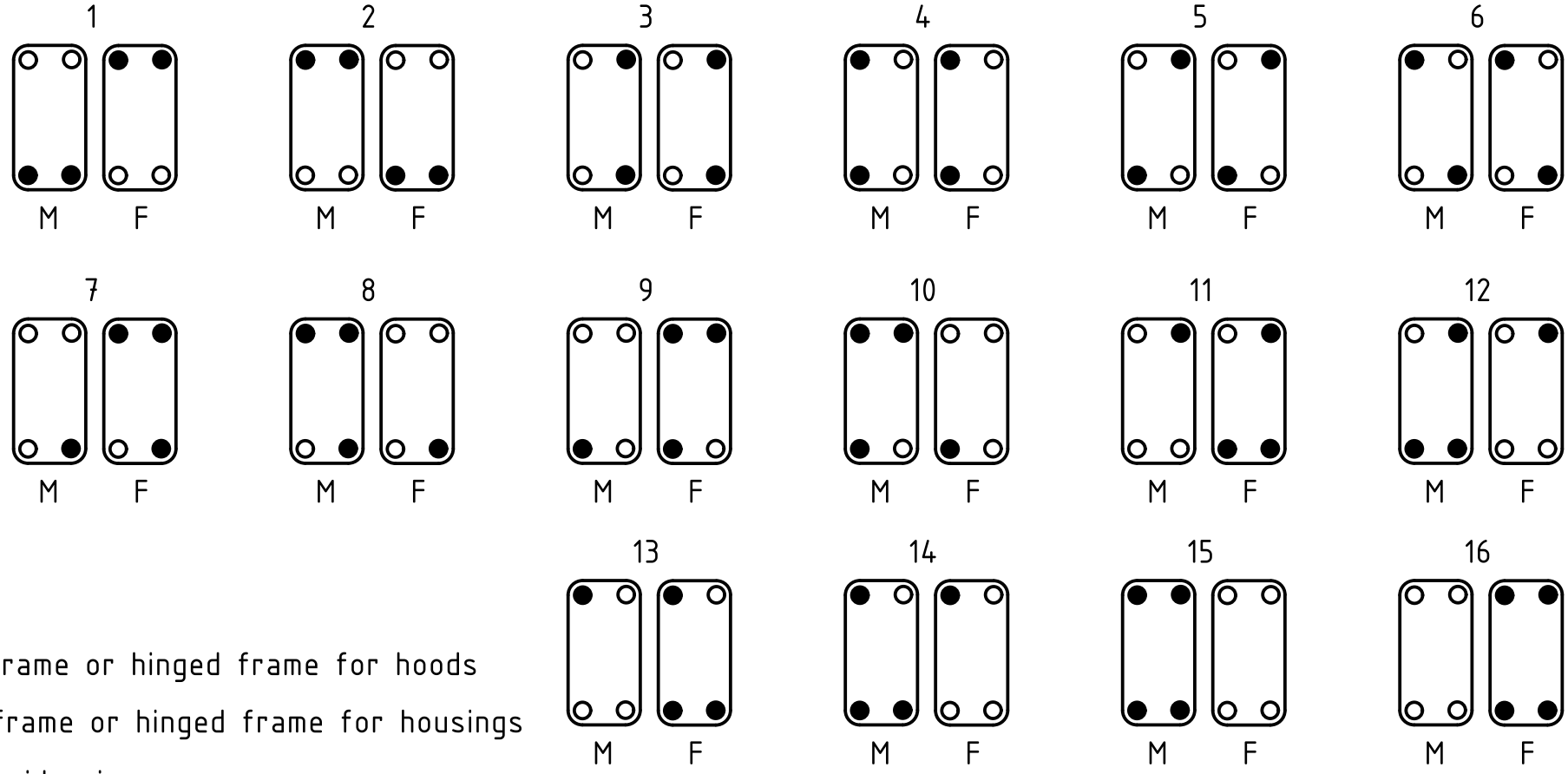

F - frame or hinged frame for hoods

M - frame or hinged frame for housings

● - guide pin

○ - guide bush

All rights reserved

Department EL PD - DE

HARTING Electric GmbH & Co. KG

D-32339 Espelkamp

Created by	Inspected by	Standardisation	Date	State
KLASSENP	BERGHORN	TIEMANNA	2017-01-16	Final Release

Title: Han-Modular Fuehrungsstifte

Doc-Key / ECM-Nr.: 100175794/UGD/003/D 500000113697

Type: TB

Number: 09 14 000 990X

Rev.: D

Page: 2/3

A4

coding system with code pins

for hoods/housings with two frame or two hinged frame

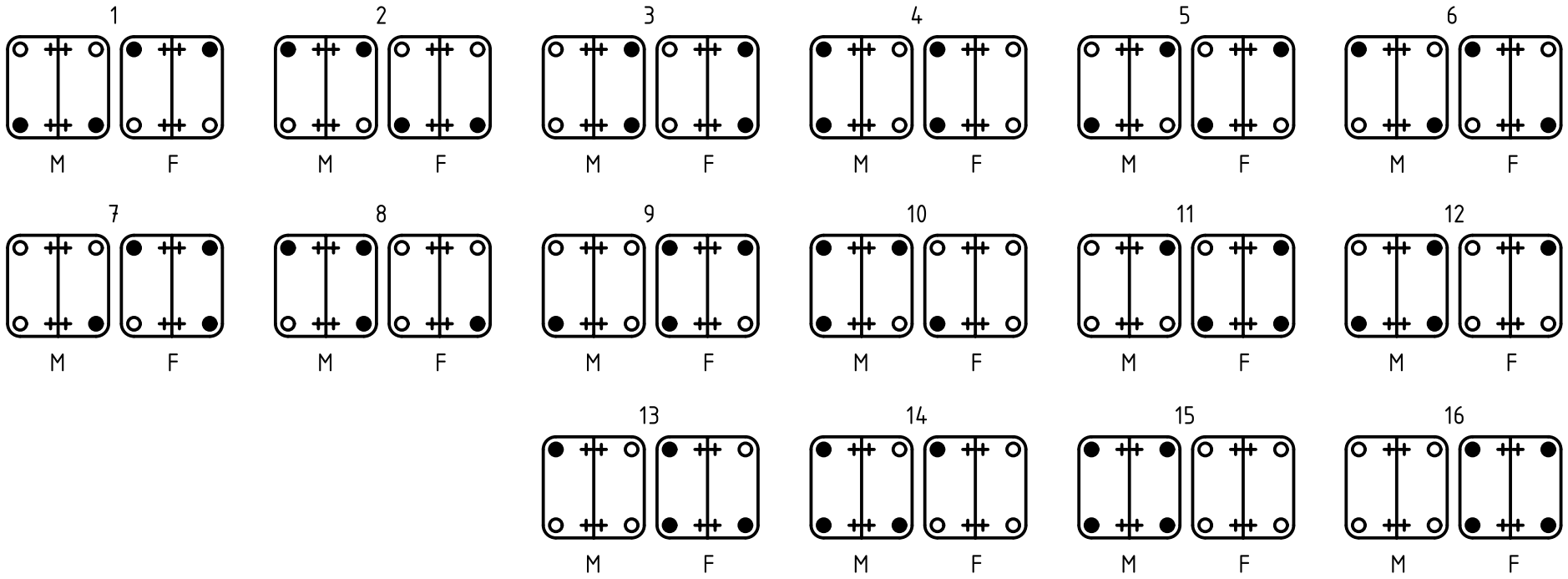

F - frame or hinged frame for hoods

M - frame or hinged frame for housings

● - guide pin

○ - guide bush

\+ - mounting screw

All rights reserved

Department EL PD - DE

HARTING Electric GmbH & Co. KG

D-32339 Espelkamp

Created by	Inspected by	Standardisation	Date	State
KLASSENP	BERGHORN	TIEMANNA	2017-01-16	Final Release

Title: Han-Modular Fuehrungsstifte

Doc-Key / ECM-Nr.: 100175794/UGD/003/D 500000113697

Type: TB

Number: 09 14 000 990X

Rev.: D

Page: 3/3

A4