FOR 客户名称	APPROVED 客户确认签字	ATTN 销售负责人

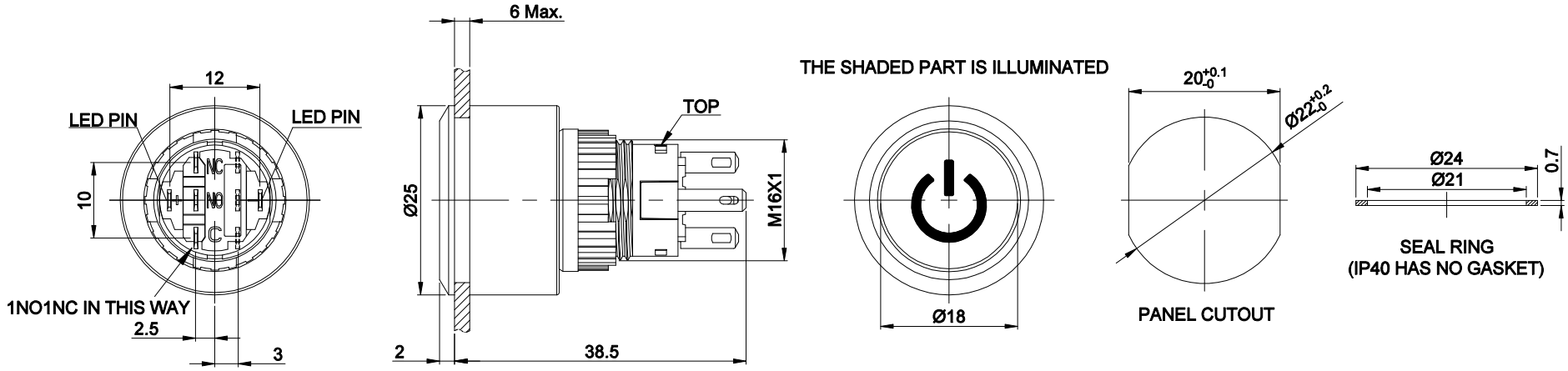

PART NUMBER: LAS1-AWY-□■T/△/▲/◎

SCHEMATIC

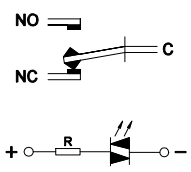

SINGLE-BREAKPOINT QUICK-ACTING CONTACT SWITCHES WITH THREE TERMINALS

"□"	CONTACT STRUCTURE
11	1NO1NC
22	2NO2NC

"■"	OPERATION MODE
NO LETTER	MOMENTARY
Z	LATCHING

"△"	CAP OR LAMP COLOR
R	RED
G	GREEN
Y	YELLOW
B	BLUE
W	WHITE

"▲"	LAMP VOLTAGE
6V	AC/DC 6V
12V	AC/DC 12V
24V	AC/DC 24V
110V	AC/DC 110V
220V	AC/DC 220V

OTHER VOLTAGE CAN BE MADE TO ORDER

"◎"	IP CLASS
NO LETTER	IP40
P	IP65

SPECIFICATIONS:
1.SWITCH RATING: Ui:250V, Ith:5A.
2.MECHANICAL LIFE: ≥1,000,000 cycles.
3.ELECTRICAL LIFE: ≥50,000 cycles.
4.INITIAL CONTACT RESISTANCE: ≤50mΩ.
5.INSULATION RESISTANCE: ≥1000MΩ(500VDC).
6.POWER-FREQUENCY WITHSTAND VOLTAGE:
BETWEEN CONTACT AND LAMP TERMINALS: AC 2,000V, RMS 50HZ, 1min;
BETWEEN TERMINALS OF THE SAME POLE: AC 1,500V, RMS 50HZ, 1min;
BETWEEN TERMINALS OF DIFFERENT POLE: AC 2,000V, RMS 50HZ, 1min.
7.OPERATING TEMPERATURE: -25˚C～ +55˚C(NO FREEZING, KEEP THE AIR FLOWING AROUND PUSHBUTTON).
8.OPERATING FORCE: ABOUT 1.7N(1NO1NC), ABOUT 3N(2NO2NC).
9.OPERATING TRAVEL: ABOUT 3mm.
10.FRONT PANEL PROTECTION DEGREE: IP40/IP65.
11.TERMINAL TYPE: PIN TERMINAL(2.8 X 0.5mm).
12.GENERAL TOLERANCE:0-18mm=±0.25, 18-80mm=±0.52.

MATERIALS:
1.CONTACT: SILVER ALLOY.
2.BUTTON: PC.
3.BODY: PC.
4.BASE: PBT.

BRAND 品牌	红波按钮制造有限公司 ONPOW PUSH BUTTON MANUFACTURE CO.,LTD.		
TITLE 名称	LAS1-AP(W) SERIES PUSHBUTTON SWITCHES	UNIT 单位	mm
DWG NO. 图号	LAS1-AWY-T	SCALE 比例 1.2 : 1	SIZE 图纸 A4
FILE NAME 档案名称	LAS1-AWY-T .DWG	DRAWN 制图 YDY 2024/10/18	SHEET 张 1/1	REV. 版本 V1.0