PIC16F8X

18-pin Flash/EEPROM 8-Bit Microcontrollers

Devices Included in this Data Sheet:

- PIC16F83
- PIC16F84
- PIC16CR83
- PIC16CR84
- Extended voltage range devices available (PIC16**LF**8X, PIC16**LCR**8X)

High Performance RISC CPU Features:

- Only 35 single word instructions to learn
- All instructions single cycle except for program branches which are two-cycle
- Operating speed: DC - 10 MHz clock input
  DC - 400 ns instruction cycle

Device	Program Memory (words)	Data RAM (bytes)	Data EEPROM (bytes)	Max. Freq (MHz)
PIC16F83	512 Flash	36	64	10
PIC16F84	1 K Flash	68	64	10
PIC16CR83	512 ROM	36	64	10
PIC16CR84	1 K ROM	68	64	10

- 14-bit wide instructions
- 8-bit wide data path
- 15 special function hardware registers
- Eight-level deep hardware stack
- Direct, indirect and relative addressing modes
- Four interrupt sources:
  - External RB0/INT pin
  - TMR0 timer overflow
  - PORTB<7:4> interrupt on change
  - Data EEPROM write complete
- 1000 erase/write cycles Flash program memory
- 10,000,000 erase/write cycles EEPROM data memory
- EEPROM Data Retention > 40 years

Peripheral Features:

- 13 I/O pins with individual direction control
- High current sink/source for direct LED drive
  - 25 mA sink max. per pin
  - 20 mA source max. per pin
- TMR0: 8-bit timer/counter with 8-bit programmable prescaler

Pin Diagrams

PDIP, SOIC

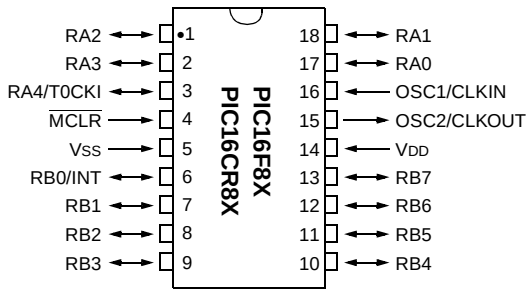

Special Microcontroller Features:

- In-Circuit Serial Programming (ICSP™) - via two pins (ROM devices support only Data EEPROM programming)
- Power-on Reset (POR)
- Power-up Timer (PWRT)
- Oscillator Start-up Timer (OST)
- Watchdog Timer (WDT) with its own on-chip RC oscillator for reliable operation
- Code-protection
- Power saving SLEEP mode
- Selectable oscillator options

CMOS Flash/EEPROM Technology:

- Low-power, high-speed technology
- Fully static design
- Wide operating voltage range:
  - Commercial: 2.0V to 6.0V
  - Industrial: 2.0V to 6.0V
- Low power consumption:
  - < 2 mA typical @ 5V, 4 MHz
  - 15 μA typical @ 2V, 32 kHz
  - < 1 μA typical standby current @ 2V

© 1998 Microchip Technology Inc.

Table of Contents

1.0 General Description ... 3
2.0 PIC16F8X Device Varieties ... 5
3.0 Architectural Overview ... 7
4.0 Memory Organization ... 11
5.0 I/O Ports ... 21
6.0 Timer0 Module and TMR0 Register ... 27
7.0 Data EEPROM Memory ... 33
8.0 Special Features of the CPU ... 37
9.0 Instruction Set Summary ... 53
10.0 Development Support ... 69
11.0 Electrical Characteristics for PIC16F83 and PIC16F84 ... 73
12.0 Electrical Characteristics for PIC16CR83 and PIC16CR84 ... 85
13.0 DC & AC Characteristics Graphs/Tables ... 97
14.0 Packaging Information ... 109
Appendix A: Feature Improvements - From PIC16C5X To PIC16F8X ... 113
Appendix B: Code Compatibility - from PIC16C5X to PIC16F8X ... 113
Appendix C: What's New In This Data Sheet ... 114
Appendix D: What's Changed In This Data Sheet ... 114
Appendix E: Conversion Considerations - PIC16C84 to PIC16F83/F84 And PIC16CR83/CR84 ... 115
Index ... 117
On-Line Support ... 119
Reader Response ... 120
PIC16F8X Product Identification System ... 121
Sales and Support ... 121

To Our Valued Customers

We constantly strive to improve the quality of all our products and documentation. We have spent a great deal of time to ensure that these documents are correct. However, we realize that we may have missed a few things. If you find any information that is missing or appears in error, please use the reader response form in the back of this data sheet to inform us. We appreciate your assistance in making this a better document.

© 1998 Microchip Technology Inc.

1.0 GENERAL DESCRIPTION

The PIC16F8X is a group in the PIC16CXX family of low-cost, high-performance, CMOS, fully-static, 8-bit microcontrollers. This group contains the following devices:

- PIC16F83
- PIC16F84
- PIC16CR83
- PIC16CR84

All PICmicro™ microcontrollers employ an advanced RISC architecture. PIC16F8X devices have enhanced core features, eight-level deep stack, and multiple internal and external interrupt sources. The separate instruction and data buses of the Harvard architecture allow a 14-bit wide instruction word with a separate 8-bit wide data bus. The two stage instruction pipeline allows all instructions to execute in a single cycle, except for program branches (which require two cycles). A total of 35 instructions (reduced instruction set) are available. Additionally, a large register set is used to achieve a very high performance level.

PIC16F8X microcontrollers typically achieve a 2:1 code compression and up to a 4:1 speed improvement (at 20 MHz) over other 8-bit microcontrollers in their class.

The PIC16F8X has up to 68 bytes of RAM, 64 bytes of Data EEPROM memory, and 13 I/O pins. A timer/counter is also available.

The PIC16CXX family has special features to reduce external components, thus reducing cost, enhancing system reliability and reducing power consumption. There are four oscillator options, of which the single pin RC oscillator provides a low-cost solution, the LP oscillator minimizes power consumption, XT is a standard crystal, and the HS is for High Speed crystals. The SLEEP (power-down) mode offers power saving. The user can wake the chip from sleep through several external and internal interrupts and resets.

A highly reliable Watchdog Timer with its own on-chip RC oscillator provides protection against software lock-up.

The devices with Flash program memory allow the same device package to be used for prototyping and production. In-circuit reprogrammability allows the code to be updated without the device being removed from the end application. This is useful in the development of many applications where the device may not be easily accessible, but the prototypes may require code updates. This is also useful for remote applications where the code may need to be updated (such as rate information).

Table 1-1 lists the features of the PIC16F8X. A simplified block diagram of the PIC16F8X is shown in Figure 3-1.

The PIC16F8X fits perfectly in applications ranging from high speed automotive and appliance motor control to low-power remote sensors, electronic locks, security devices and smart cards. The Flash/EEPROM technology makes customization of application programs (transmitter codes, motor speeds, receiver frequencies, security codes, etc.) extremely fast and convenient. The small footprint packages make this microcontroller series perfect for all applications with space limitations. Low-cost, low-power, high performance, ease-of-use and I/O flexibility make the PIC16F8X very versatile even in areas where no microcontroller use has been considered before (e.g., timer functions; serial communication; capture, compare and PWM functions; and co-processor applications).

The serial in-system programming feature (via two pins) offers flexibility of customizing the product after complete assembly and testing. This feature can be used to serialize a product, store calibration data, or program the device with the current firmware before shipping.

1.1 Family and Upward Compatibility

Those users familiar with the PIC16C5X family of microcontrollers will realize that this is an enhanced version of the PIC16C5X architecture. Please refer to Appendix A for a detailed list of enhancements. Code written for PIC16C5X devices can be easily ported to PIC16F8X devices (Appendix B).

1.2 Development Support

The PIC16CXX family is supported by a full-featured macro assembler, a software simulator, an in-circuit emulator, a low-cost development programmer and a full-featured programmer. A “C” compiler and fuzzy logic support tools are also available.

© 1998 Microchip Technology Inc.

TABLE 1-1 PIC16F8X FAMILY OF DEVICES

		PIC16F83	PIC16CR83	PIC16F84	PIC16CR84
Clock	Maximum Frequency of Operation (MHz)	10	10	10	10
Memory	Flash Program Memory	512	—	1K	—
	EEPROM Program Memory	—	—	—	—
	ROM Program Memory	—	512	—	1K
	Data Memory (bytes)	36	36	68	68
	Data EEPROM (bytes)	64	64	64	64
Peripherals	Timer Module(s)	TMR0	TMR0	TMR0	TMR0
	Interrupt Sources	4	4	4	4
Features	I/O Pins	13	13	13	13
	Voltage Range (Volts)	2.0-6.0	2.0-6.0	2.0-6.0	2.0-6.0
	Packages	18-pin DIP, SOIC	18-pin DIP, SOIC	18-pin DIP, SOIC	18-pin DIP, SOIC

All PICmicro™ Family devices have Power-on Reset, selectable Watchdog Timer, selectable code protect and high I/O current capability. All PIC16F8X Family devices use serial programming with clock pin RB6 and data pin RB7.

© 1998 Microchip Technology Inc.

2.0 PIC16F8X DEVICE VARIETIES

A variety of frequency ranges and packaging options are available. Depending on application and production requirements the proper device option can be selected using the information in this section. When placing orders, please use the "PIC16F8X Product Identification System" at the back of this data sheet to specify the correct part number.

There are four device "types" as indicated in the device number.

1. **F**, as in PIC16**F**84. These devices have Flash program memory and operate over the standard voltage range.
2. **LF**, as in PIC16**LF**84. These devices have Flash program memory and operate over an extended voltage range.
3. **CR**, as in PIC16**CR**83. These devices have ROM program memory and operate over the standard voltage range.
4. **LCR**, as in PIC16**LCR**84. These devices have ROM program memory and operate over an extended voltage range.

When discussing memory maps and other architectural features, the use of **F** and **CR** also implies the **LF** and **LCR** versions.

2.1 Flash Devices

These devices are offered in the lower cost plastic package, even though the device can be erased and reprogrammed. This allows the same device to be used for prototype development and pilot programs as well as production.

A further advantage of the electrically-erasable Flash version is that it can be erased and reprogrammed in-circuit, or by device programmers, such as Microchip's PICSTART® Plus or PRO MATE® II programmers.

2.2 Quick-Turnaround-Production (QTP) Devices

Microchip offers a QTP Programming Service for factory production orders. This service is made available for users who choose not to program a medium to high quantity of units and whose code patterns have stabilized. The devices have all Flash locations and configuration options already programmed by the factory. Certain code and prototype verification procedures do apply before production shipments are available.

For information on submitting a QTP code, please contact your Microchip Regional Sales Office.

2.3 Serialized Quick-Turnaround-Production (SQTP℠) Devices

Microchip offers the unique programming service where a few user-defined locations in each device are programmed with different serial numbers. The serial numbers may be random, pseudo-random or sequential.

Serial programming allows each device to have a unique number which can serve as an entry-code, password or ID number.

For information on submitting a SQTP code, please contact your Microchip Regional Sales Office.

2.4 ROM Devices

Some of Microchip's devices have a corresponding device where the program memory is a ROM. These devices give a cost savings over Microchip's traditional user programmed devices (EPROM, EEPROM).

ROM devices (PIC16CR8X) do not allow serialization information in the program memory space. The user may program this information into the Data EEPROM.

For information on submitting a ROM code, please contact your Microchip Regional Sales Office.

© 1998 Microchip Technology Inc.

NOTES:

© 1998 Microchip Technology Inc.

3.0 ARCHITECTURAL OVERVIEW

The high performance of the PIC16CXX family can be attributed to a number of architectural features commonly found in RISC microprocessors. To begin with, the PIC16CXX uses a Harvard architecture. This architecture has the program and data accessed from separate memories. So the device has a program memory bus and a data memory bus. This improves bandwidth over traditional von Neumann architecture where program and data are fetched from the same memory (accesses over the same bus). Separating program and data memory further allows instructions to be sized differently than the 8-bit wide data word. PIC16CXX opcodes are 14-bits wide, enabling single word instructions. The full 14-bit wide program memory bus fetches a 14-bit instruction in a single cycle. A two-stage pipeline overlaps fetch and execution of instructions (Example 3-1). Consequently, all instructions execute in a single cycle except for program branches.

The PIC16F83 and PIC16CR83 address 512 x 14 of program memory, and the PIC16F84 and PIC16CR84 address 1K x 14 program memory. All program memory is internal.

The PIC16CXX can directly or indirectly address its register files or data memory. All special function registers including the program counter are mapped in the data memory. An orthogonal (symmetrical) instruction set makes it possible to carry out any operation on any register using any addressing mode. This symmetrical nature and lack of ‘special optimal situations’ make programming with the PIC16CXX simple yet efficient. In addition, the learning curve is reduced significantly.

PIC16CXX devices contain an 8-bit ALU and working register. The ALU is a general purpose arithmetic unit. It performs arithmetic and Boolean functions between data in the working register and any register file.

The ALU is 8-bits wide and capable of addition, subtraction, shift and logical operations. Unless otherwise mentioned, arithmetic operations are two's complement in nature. In two-operand instructions, typically one operand is the working register (W register), and the other operand is a file register or an immediate constant. In single operand instructions, the operand is either the W register or a file register.

The W register is an 8-bit working register used for ALU operations. It is not an addressable register.

Depending on the instruction executed, the ALU may affect the values of the Carry (C), Digit Carry (DC), and Zero (Z) bits in the STATUS register. The C and DC bits operate as a borrow and digit borrow out bit, respectively, in subtraction. See the `SUBLW` and `SUBWF` instructions for examples.

A simplified block diagram for the PIC16F8X is shown in Figure 3-1, its corresponding pin description is shown in Table 3-1.

FIGURE 3-1: PIC16F8X BLOCK DIAGRAM

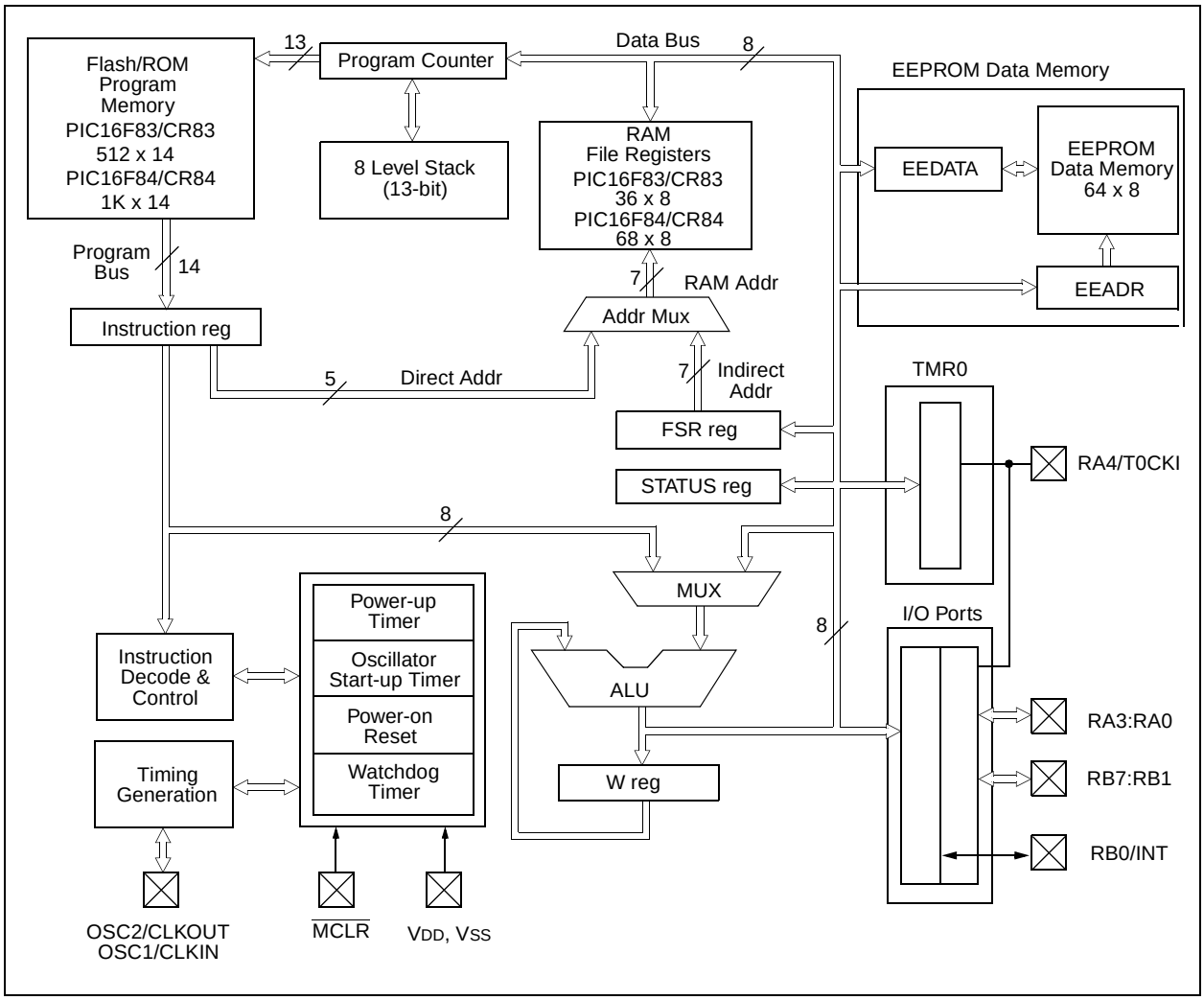

© 1998 Microchip Technology Inc.

TABLE 3-1 PIC16F8X PINOUT DESCRIPTION

Pin Name	DIP No.	SOIC No.	I/O/P Type	Buffer Type	Description
OSC1/CLKIN	16	16	I	ST/CMOS (3)	Oscillator crystal input/external clock source input.
OSC2/CLKOUT	15	15	O	—	Oscillator crystal output. Connects to crystal or resonator in crystal oscillator mode. In RC mode, OSC2 pin outputs CLKOUT which has 1/4 the frequency of OSC1, and denotes the instruction cycle rate.
$\overline{\text{MCLR}}$	4	4	I/P	ST	Master clear (reset) input/programming voltage input. This pin is an active low reset to the device.
					PORTA is a bi-directional I/O port.
RA0	17	17	I/O	TTL	
RA1	18	18	I/O	TTL	
RA2	1	1	I/O	TTL	
RA3	2	2	I/O	TTL	
RA4/T0CKI	3	3	I/O	ST	Can also be selected to be the clock input to the TMR0 timer/counter. Output is open drain type.
					PORTB is a bi-directional I/O port. PORTB can be software programmed for internal weak pull-up on all inputs.
RB0/INT	6	6	I/O	TTL/ST (1)	RB0/INT can also be selected as an external interrupt pin.
RB1	7	7	I/O	TTL	
RB2	8	8	I/O	TTL	
RB3	9	9	I/O	TTL	
RB4	10	10	I/O	TTL	Interrupt on change pin.
RB5	11	11	I/O	TTL	Interrupt on change pin.
RB6	12	12	I/O	TTL/ST (2)	Interrupt on change pin. Serial programming clock.
RB7	13	13	I/O	TTL/ST (2)	Interrupt on change pin. Serial programming data.
VSS	5	5	P	—	Ground reference for logic and I/O pins.
VDD	14	14	P	—	Positive supply for logic and I/O pins.

Legend: I= input O = output I/O = Input/Output P = power
— = Not used TTL = TTL input ST = Schmitt Trigger input

Note 1: This buffer is a Schmitt Trigger input when configured as the external interrupt.
2: This buffer is a Schmitt Trigger input when used in serial programming mode.
3: This buffer is a Schmitt Trigger input when configured in RC oscillator mode and a CMOS input otherwise.

3.1 Clocking Scheme/Instruction Cycle

The clock input (from OSC1) is internally divided by four to generate four non-overlapping quadrature clocks namely Q1, Q2, Q3 and Q4. Internally, the program counter (PC) is incremented every Q1, the instruction is fetched from the program memory and latched into the instruction register in Q4. The instruction is decoded and executed during the following Q1 through Q4. The clocks and instruction execution flow is shown in Figure 3-2.

3.2 Instruction Flow/Pipelining

An “Instruction Cycle” consists of four Q cycles (Q1, Q2, Q3 and Q4). The instruction fetch and execute are pipelined such that fetch takes one instruction cycle while decode and execute takes another instruction cycle. However, due to the pipelining, each instruction effectively executes in one cycle. If an instruction causes the program counter to change (e.g., `GOTO`) then two cycles are required to complete the instruction (Example 3-1).

A fetch cycle begins with the Program Counter (PC) incrementing in Q1.

In the execution cycle, the fetched instruction is latched into the “Instruction Register” in cycle Q1. This instruction is then decoded and executed during the Q2, Q3, and Q4 cycles. Data memory is read during Q2 (operand read) and written during Q4 (destination write).

FIGURE 3-2: CLOCK/INSTRUCTION CYCLE

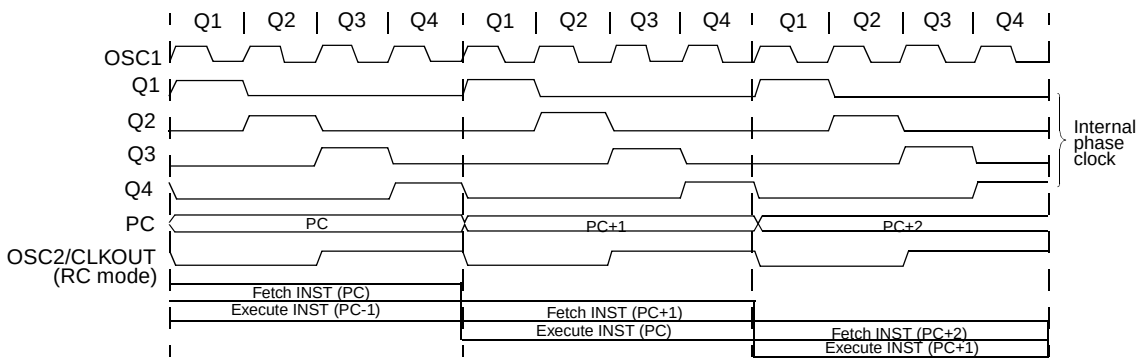

EXAMPLE 3-1: INSTRUCTION PIPELINE FLOW

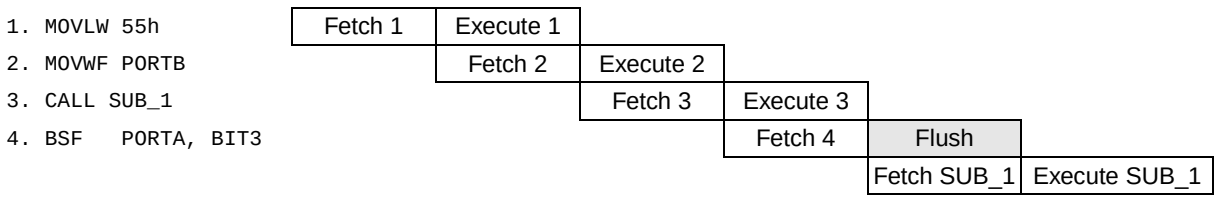

All instructions are single cycle, except for any program branches. These take two cycles since the fetch instruction is “flushed” from the pipeline while the new instruction is being fetched and then executed.

© 1998 Microchip Technology Inc.

4.0 MEMORY ORGANIZATION

There are two memory blocks in the PIC16F8X. These are the program memory and the data memory. Each block has its own bus, so that access to each block can occur during the same oscillator cycle.

The data memory can further be broken down into the general purpose RAM and the Special Function Registers (SFRs). The operation of the SFRs that control the “core” are described here. The SFRs used to control the peripheral modules are described in the section discussing each individual peripheral module.

The data memory area also contains the data EEPROM memory. This memory is not directly mapped into the data memory, but is indirectly mapped. That is, an indirect address pointer specifies the address of the data EEPROM memory to read/write. The 64 bytes of data EEPROM memory have the address range 0h-3Fh. More details on the EEPROM memory can be found in Section 7.0.

4.1 Program Memory Organization

The PIC16FXX has a 13-bit program counter capable of addressing an 8K x 14 program memory space. For the PIC16F83 and PIC16CR83, the first 512 x 14 (0000h-01FFh) are physically implemented (Figure 4-1). For the PIC16F84 and PIC16CR84, the first 1K x 14 (0000h-03FFh) are physically implemented (Figure 4-2). Accessing a location above the physically implemented address will cause a wrap-around. For example, for the PIC16F84 locations 20h, 420h, 820h, C20h, 1020h, 1420h, 1820h, and 1C20h will be the same instruction.

The reset vector is at 0000h and the interrupt vector is at 0004h.

FIGURE 4-1: PROGRAM MEMORY MAP AND STACK - PIC16F83/CR83

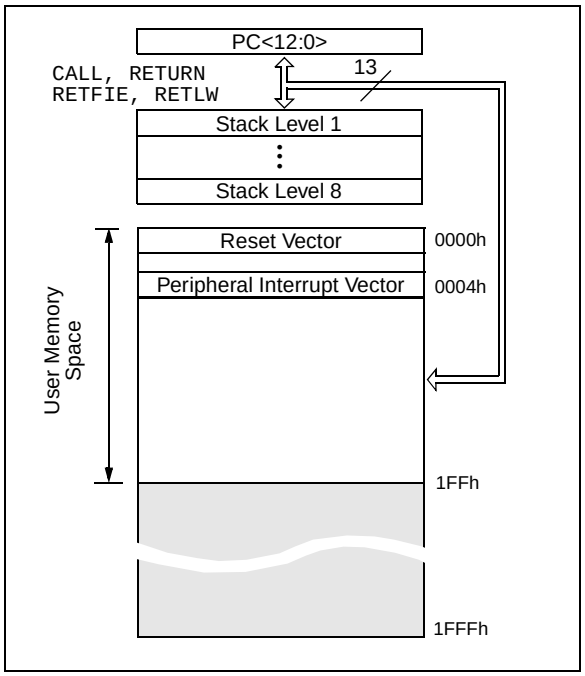

FIGURE 4-2: PROGRAM MEMORY MAP AND STACK - PIC16F84/CR84

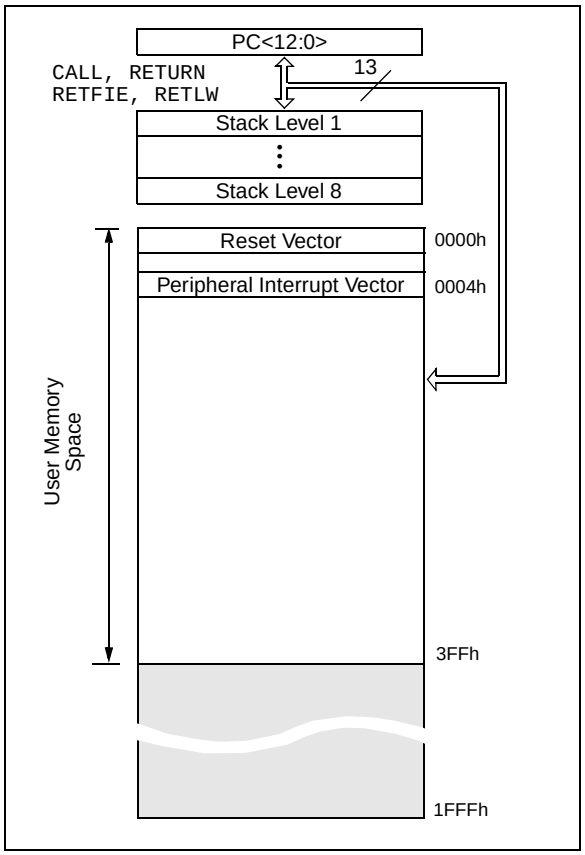

4.2 Data Memory Organization

The data memory is partitioned into two areas. The first is the Special Function Registers (SFR) area, while the second is the General Purpose Registers (GPR) area. The SFRs control the operation of the device.

Portions of data memory are banked. This is for both the SFR area and the GPR area. The GPR area is banked to allow greater than 116 bytes of general purpose RAM. The banked areas of the SFR are for the registers that control the peripheral functions. Banking requires the use of control bits for bank selection. These control bits are located in the STATUS Register. Figure 4-1 and Figure 4-2 show the data memory map organization.

Instructions `MOVWF` and `MOVF` can move values from the W register to any location in the register file (“F”), and vice-versa.

The entire data memory can be accessed either directly using the absolute address of each register file or indirectly through the File Select Register (FSR) (Section 4.5). Indirect addressing uses the present value of the RP1:RP0 bits for access into the banked areas of data memory.

Data memory is partitioned into two banks which contain the general purpose registers and the special function registers. Bank 0 is selected by clearing the RP0 bit (STATUS<5>). Setting the RP0 bit selects Bank 1. Each Bank extends up to 7Fh (128 bytes). The first twelve locations of each Bank are reserved for the Special Function Registers. The remainder are General Purpose Registers implemented as static RAM.

4.2.1 GENERAL PURPOSE REGISTER FILE

All devices have some amount of General Purpose Register (GPR) area. Each GPR is 8 bits wide and is accessed either directly or indirectly through the FSR (Section 4.5).

The GPR addresses in bank 1 are mapped to addresses in bank 0. As an example, addressing location 0Ch or 8Ch will access the same GPR.

4.2.2 SPECIAL FUNCTION REGISTERS

The Special Function Registers (Figure 4-1, Figure 4-2 and Table 4-1) are used by the CPU and Peripheral functions to control the device operation. These registers are static RAM.

The special function registers can be classified into two sets, core and peripheral. Those associated with the core functions are described in this section. Those related to the operation of the peripheral features are described in the section for that specific feature.

© 1998 Microchip Technology Inc.

FIGURE 4-1: REGISTER FILE MAP - PIC16F83/CR83

File Address	Bank 0	Bank 1	File Address
00h	Indirect addr.(1)	Indirect addr.(1)	80h
01h	TMR0	OPTION	81h
02h	PCL	PCL	82h
03h	STATUS	STATUS	83h
04h	FSR	FSR	84h
05h	PORTA	TRISA	85h
06h	PORTB	TRISB	86h
07h			87h
08h	EEDATA	EECON1	88h
09h	EEADR	EECON2(1)	89h
0Ah	PCLATH	PCLATH	8Ah
0Bh	INTCON	INTCON	8Bh
0Ch–2Fh	36 General Purpose registers (SRAM)	Mapped (accesses) in Bank 0	8Ch–AFh
30h–7Fh			B0h–FFh

☐ Unimplemented data memory location; read as '0'.

Note 1: Not a physical register.

FIGURE 4-2: REGISTER FILE MAP - PIC16F84/CR84

File Address	Bank 0	Bank 1	File Address
00h	Indirect addr.(1)	Indirect addr.(1)	80h
01h	TMR0	OPTION	81h
02h	PCL	PCL	82h
03h	STATUS	STATUS	83h
04h	FSR	FSR	84h
05h	PORTA	TRISA	85h
06h	PORTB	TRISB	86h
07h			87h
08h	EEDATA	EECON1	88h
09h	EEADR	EECON2(1)	89h
0Ah	PCLATH	PCLATH	8Ah
0Bh	INTCON	INTCON	8Bh
0Ch–4Fh	68 General Purpose registers (SRAM)	Mapped (accesses) in Bank 0	8Ch–CFh
50h–7Fh			D0h–FFh

☐ Unimplemented data memory location; read as '0'.

Note 1: Not a physical register.

TABLE 4-1 REGISTER FILE SUMMARY

Address	Name	Bit 7	Bit 6	Bit 5	Bit 4	Bit 3	Bit 2	Bit 1	Bit 0	Value on Power-on Reset	Value on all other resets (Note3)
Bank 0											
00h	INDF	Uses contents of FSR to address data memory (not a physical register)								---- ----	---- ----
01h	TMR0	8-bit real-time clock/counter								xxxx xxxx	uuuu uuuu
02h	PCL	Low order 8 bits of the Program Counter (PC)								0000 0000	0000 0000
03h	STATUS (2)	IRP	RP1	RP0	$\overline{TO}$	$\overline{PD}$	Z	DC	C	0001 1xxx	000q quuu
04h	FSR	Indirect data memory address pointer 0								xxxx xxxx	uuuu uuuu
05h	PORTA	—	—	—	RA4/T0CKI	RA3	RA2	RA1	RA0	---x xxxx	---u uuuu
06h	PORTB	RB7	RB6	RB5	RB4	RB3	RB2	RB1	RB0/INT	xxxx xxxx	uuuu uuuu
07h		Unimplemented location, read as '0'								---- ----	---- ----
08h	EEDATA	EEPROM data register								xxxx xxxx	uuuu uuuu
09h	EEADR	EEPROM address register								xxxx xxxx	uuuu uuuu
0Ah	PCLATH	—	—	—	Write buffer for upper 5 bits of the PC (1)					---0 0000	---0 0000
0Bh	INTCON	GIE	EEIE	T0IE	INTE	RBIE	T0IF	INTF	RBIF	0000 000x	0000 000u
Bank 1											
80h	INDF	Uses contents of FSR to address data memory (not a physical register)								---- ----	---- ----
81h	OPTION_REG	$\overline{RBPU}$	INTEDG	T0CS	T0SE	PSA	PS2	PS1	PS0	1111 1111	1111 1111
82h	PCL	Low order 8 bits of Program Counter (PC)								0000 0000	0000 0000
83h	STATUS (2)	IRP	RP1	RP0	$\overline{TO}$	$\overline{PD}$	Z	DC	C	0001 1xxx	000q quuu
84h	FSR	Indirect data memory address pointer 0								xxxx xxxx	uuuu uuuu
85h	TRISA	—	—	—	PORTA data direction register					---1 1111	---1 1111
86h	TRISB	PORTB data direction register								1111 1111	1111 1111
87h		Unimplemented location, read as '0'								---- ----	---- ----
88h	EECON1	—	—	—	EEIF	WRERR	WREN	WR	RD	---0 x000	---0 q000
89h	EECON2	EEPROM control register 2 (not a physical register)								---- ----	---- ----
0Ah	PCLATH	—	—	—	Write buffer for upper 5 bits of the PC (1)					---0 0000	---0 0000
0Bh	INTCON	GIE	EEIE	T0IE	INTE	RBIE	T0IF	INTF	RBIF	0000 000x	0000 000u

Legend: x = unknown, u = unchanged. - = unimplemented read as '0', q = value depends on condition.

Note 1: The upper byte of the program counter is not directly accessible. PCLATH is a slave register for PC<12:8>. The contents of PCLATH can be transferred to the upper byte of the program counter, but the contents of PC<12:8> is never transferred to PCLATH.

2: The $\overline{TO}$ and $\overline{PD}$ status bits in the STATUS register are not affected by a $\overline{MCLR}$ reset.

3: Other (non power-up) resets include: external reset through $\overline{MCLR}$ and the Watchdog Timer Reset.

© 1998 Microchip Technology Inc.

4.2.2.1 STATUS REGISTER

The STATUS register contains the arithmetic status of the ALU, the RESET status and the bank select bit for data memory.

As with any register, the STATUS register can be the destination for any instruction. If the STATUS register is the destination for an instruction that affects the Z, DC or C bits, then the write to these three bits is disabled. These bits are set or cleared according to device logic. Furthermore, the $\overline{TO}$ and $\overline{PD}$ bits are not writable. Therefore, the result of an instruction with the STATUS register as destination may be different than intended.

For example, `CLRF STATUS` will clear the upper-three bits and set the Z bit. This leaves the STATUS register as `000u u1uu` (where u = unchanged).

Only the `BCF`, `BSF`, `SWAPF` and `MOVWF` instructions should be used to alter the STATUS register (Table 9-2) because these instructions do not affect any status bit.

> **Note 1:** The IRP and RP1 bits (STATUS<7:6>) are not used by the PIC16F8X and should be programmed as cleared. Use of these bits as general purpose R/W bits is NOT recommended, since this may affect upward compatibility with future products.
>
> **Note 2:** The C and DC bits operate as a $\overline{\text{borrow}}$ and digit borrow out bit, respectively, in subtraction. See the `SUBLW` and `SUBWF` instructions for examples.
>
> **Note 3:** When the STATUS register is the destination for an instruction that affects the Z, DC or C bits, then the write to these three bits is disabled. The specified bit(s) will be updated according to device logic

FIGURE 4-1: STATUS REGISTER (ADDRESS 03h, 83h)

R/W-0	R/W-0	R/W-0	R-1	R-1	R/W-x	R/W-x	R/W-x
IRP	RP1	RP0	$\overline{TO}$	$\overline{PD}$	Z	DC	C
bit7							bit0

R = Readable bit
W = Writable bit
U = Unimplemented bit, read as ‘0’
- n = Value at POR reset

bit 7: **IRP**: Register Bank Select bit (used for indirect addressing)
0 = Bank 0, 1 (00h - FFh)
1 = Bank 2, 3 (100h - 1FFh)
The IRP bit is not used by the PIC16F8X. IRP should be maintained clear.

bit 6-5: **RP1:RP0**: Register Bank Select bits (used for direct addressing)
00 = Bank 0 (00h - 7Fh)
01 = Bank 1 (80h - FFh)
10 = Bank 2 (100h - 17Fh)
11 = Bank 3 (180h - 1FFh)
Each bank is 128 bytes. Only bit RP0 is used by the PIC16F8X. RP1 should be maintained clear.

bit 4: **$\overline{TO}$**: Time-out bit
1 = After power-up, `CLRWDT` instruction, or `SLEEP` instruction
0 = A WDT time-out occurred

bit 3: **$\overline{PD}$**: Power-down bit
1 = After power-up or by the `CLRWDT` instruction
0 = By execution of the `SLEEP` instruction

bit 2: **Z**: Zero bit
1 = The result of an arithmetic or logic operation is zero
0 = The result of an arithmetic or logic operation is not zero

bit 1: **DC**: Digit carry/$\overline{\text{borrow}}$ bit (for `ADDWF` and `ADDLW` instructions) (For $\overline{\text{borrow}}$ the polarity is reversed)
1 = A carry-out from the 4th low order bit of the result occurred
0 = No carry-out from the 4th low order bit of the result

bit 0: **C**: Carry/$\overline{\text{borrow}}$ bit (for `ADDWF` and `ADDLW` instructions)
1 = A carry-out from the most significant bit of the result occurred
0 = No carry-out from the most significant bit of the result occurred
Note: For $\overline{\text{borrow}}$ the polarity is reversed. A subtraction is executed by adding the two’s complement of the second operand. For rotate (`RRF`, `RLF`) instructions, this bit is loaded with either the high or low order bit of the source register.

4.2.2.2 OPTION_REG REGISTER

The OPTION_REG register is a readable and writable register which contains various control bits to configure the TMR0/WDT prescaler, the external INT interrupt, TMR0, and the weak pull-ups on PORTB.

> **Note:** When the prescaler is assigned to the WDT (PSA = ’1’), TMR0 has a 1:1 prescaler assignment.

FIGURE 4-1: OPTION_REG REGISTER (ADDRESS 81h)

R/W-1	R/W-1	R/W-1	R/W-1	R/W-1	R/W-1	R/W-1	R/W-1
$\overline{\text{RBPU}}$	INTEDG	T0CS	T0SE	PSA	PS2	PS1	PS0
bit7							bit0

R = Readable bit
W = Writable bit
U = Unimplemented bit, read as ‘0’
- n = Value at POR reset

bit 7: **$\overline{\text{RBPU}}$**: PORTB Pull-up Enable bit
1 = PORTB pull-ups are disabled
0 = PORTB pull-ups are enabled (by individual port latch values)

bit 6: **INTEDG**: Interrupt Edge Select bit
1 = Interrupt on rising edge of RB0/INT pin
0 = Interrupt on falling edge of RB0/INT pin

bit 5: **T0CS**: TMR0 Clock Source Select bit
1 = Transition on RA4/T0CKI pin
0 = Internal instruction cycle clock (CLKOUT)

bit 4: **T0SE**: TMR0 Source Edge Select bit
1 = Increment on high-to-low transition on RA4/T0CKI pin
0 = Increment on low-to-high transition on RA4/T0CKI pin

bit 3: **PSA**: Prescaler Assignment bit
1 = Prescaler assigned to the WDT
0 = Prescaler assigned to TMR0

bit 2-0: **PS2:PS0**: Prescaler Rate Select bits

Bit Value	TMR0 Rate	WDT Rate
000	1 : 2	1 : 1
001	1 : 4	1 : 2
010	1 : 8	1 : 4
011	1 : 16	1 : 8
100	1 : 32	1 : 16
101	1 : 64	1 : 32
110	1 : 128	1 : 64
111	1 : 256	1 : 128

© 1998 Microchip Technology Inc.

4.2.2.3 INTCON REGISTER

The INTCON register is a readable and writable register which contains the various enable bits for all interrupt sources.

> **Note:** Interrupt flag bits get set when an interrupt condition occurs regardless of the state of its corresponding enable bit or the global enable bit, GIE (INTCON<7>).

FIGURE 4-1: INTCON REGISTER (ADDRESS 0Bh, 8Bh)

R/W-0	R/W-0	R/W-0	R/W-0	R/W-0	R/W-0	R/W-0	R/W-x
GIE	EEIE	T0IE	INTE	RBIE	T0IF	INTF	RBIF
bit7							bit0

R = Readable bit
W = Writable bit
U = Unimplemented bit, read as ‘0’
- n = Value at POR reset

bit 7: **GIE:** Global Interrupt Enable bit
1 = Enables all un-masked interrupts
0 = Disables all interrupts

Note: For the operation of the interrupt structure, please refer to Section 8.5.

bit 6: **EEIE**: EE Write Complete Interrupt Enable bit
1 = Enables the EE write complete interrupt
0 = Disables the EE write complete interrupt

bit 5: **T0IE**: TMR0 Overflow Interrupt Enable bit
1 = Enables the TMR0 interrupt
0 = Disables the TMR0 interrupt

bit 4: **INTE**: RB0/INT Interrupt Enable bit
1 = Enables the RB0/INT interrupt
0 = Disables the RB0/INT interrupt

bit 3: **RBIE**: RB Port Change Interrupt Enable bit
1 = Enables the RB port change interrupt
0 = Disables the RB port change interrupt

bit 2: **T0IF**: TMR0 overflow interrupt flag bit
1 = TMR0 has overflowed (must be cleared in software)
0 = TMR0 did not overflow

bit 1: **INTF**: RB0/INT Interrupt Flag bit
1 = The RB0/INT interrupt occurred
0 = The RB0/INT interrupt did not occur

bit 0: **RBIF**: RB Port Change Interrupt Flag bit
1 = When at least one of the RB7:RB4 pins changed state (must be cleared in software)
0 = None of the RB7:RB4 pins have changed state

© 1998 Microchip Technology Inc.

4.3 Program Counter: PCL and PCLATH

The Program Counter (PC) is 13-bits wide. The low byte is the PCL register, which is a readable and writable register. The high byte of the PC (PC<12:8>) is not directly readable nor writable and comes from the PCLATH register. The PCLATH (PC latch high) register is a holding register for PC<12:8>. The contents of PCLATH are transferred to the upper byte of the program counter when the PC is loaded with a new value. This occurs during a `CALL`, `GOTO` or a write to PCL. The high bits of PC are loaded from PCLATH as shown in Figure 4-1.

FIGURE 4-1: LOADING OF PC IN DIFFERENT SITUATIONS

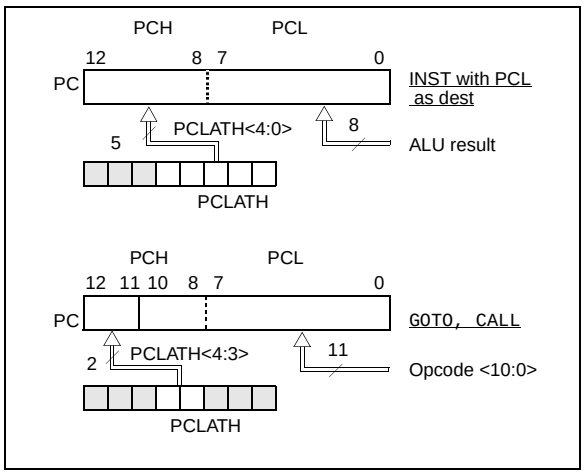

4.3.1 COMPUTED GOTO

A computed GOTO is accomplished by adding an offset to the program counter (`ADDWF PCL`). When doing a table read using a computed GOTO method, care should be exercised if the table location crosses a PCL memory boundary (each 256 word block). Refer to the application note *"Implementing a Table Read"* (AN556).

4.3.2 PROGRAM MEMORY PAGING

The PIC16F83 and PIC16CR83 have 512 words of program memory. The PIC16F84 and PIC16CR84 have 1K of program memory. The `CALL` and `GOTO` instructions have an 11-bit address range. This 11-bit address range allows a branch within a 2K program memory page size. For future PIC16F8X program memory expansion, there must be another two bits to specify the program memory page. These paging bits come from the PCLATH<4:3> bits (Figure 4-1). When doing a `CALL` or a `GOTO` instruction, the user must ensure that these page bits (PCLATH<4:3>) are programmed to the desired program memory page. If a `CALL` instruction (or interrupt) is executed, the entire 13-bit PC is "pushed" onto the stack (see next section). Therefore, manipulation of the PCLATH<4:3> is not required for the return instructions (which "pops" the PC from the stack).

> **Note:** The PIC16F8X ignores the PCLATH<4:3> bits, which are used for program memory pages 1, 2 and 3 (0800h - 1FFFh). The use of PCLATH<4:3> as general purpose R/W bits is not recommended since this may affect upward compatibility with future products.

4.4 Stack

The PIC16FXX has an 8 deep x 13-bit wide hardware stack (Figure 4-1). The stack space is not part of either program or data space and the stack pointer is not readable or writable.

The entire 13-bit PC is "pushed" onto the stack when a `CALL` instruction is executed or an interrupt is acknowledged. The stack is "popped" in the event of a `RETURN`, `RETLW` or a `RETFIE` instruction execution. PCLATH is not affected by a push or a pop operation.

> **Note:** There are no instruction mnemonics called push or pop. These are actions that occur from the execution of the `CALL`, `RETURN`, `RETLW`, and `RETFIE` instructions, or the vectoring to an interrupt address.

The stack operates as a circular buffer. That is, after the stack has been pushed eight times, the ninth push overwrites the value that was stored from the first push. The tenth push overwrites the second push (and so on).

If the stack is effectively popped nine times, the PC value is the same as the value from the first pop.

> **Note:** There are no status bits to indicate stack overflow or stack underflow conditions.

© 1998 Microchip Technology Inc.

4.5 Indirect Addressing; INDF and FSR Registers

The INDF register is not a physical register. Addressing INDF actually addresses the register whose address is contained in the FSR register (FSR is a *pointer*). This is indirect addressing.

EXAMPLE 4-1: INDIRECT ADDRESSING

- Register file 05 contains the value 10h
- Register file 06 contains the value 0Ah
- Load the value 05 into the FSR register
- A read of the INDF register will return the value of 10h
- Increment the value of the FSR register by one (FSR = 06)
- A read of the INDF register now will return the value of 0Ah.

Reading INDF itself indirectly (FSR = 0) will produce 00h. Writing to the INDF register indirectly results in a no-operation (although STATUS bits may be affected).

A simple program to clear RAM locations 20h-2Fh using indirect addressing is shown in Example 4-2.

EXAMPLE 4-2: HOW TO CLEAR RAM USING INDIRECT ADDRESSING

```
        movlw   0x20   ;initialize pointer
        movwf   FSR    ;  to RAM
NEXT    clrf    INDF   ;clear INDF register
        incf    FSR    ;inc pointer
        btfss   FSR,4  ;all done?
        goto    NEXT   ;NO, clear next
CONTINUE
        :              ;YES, continue
```

An effective 9-bit address is obtained by concatenating the 8-bit FSR register and the IRP bit (STATUS<7>), as shown in Figure 4-1. However, IRP is not used in the PIC16F8X.

FIGURE 4-1: DIRECT/INDIRECT ADDRESSING

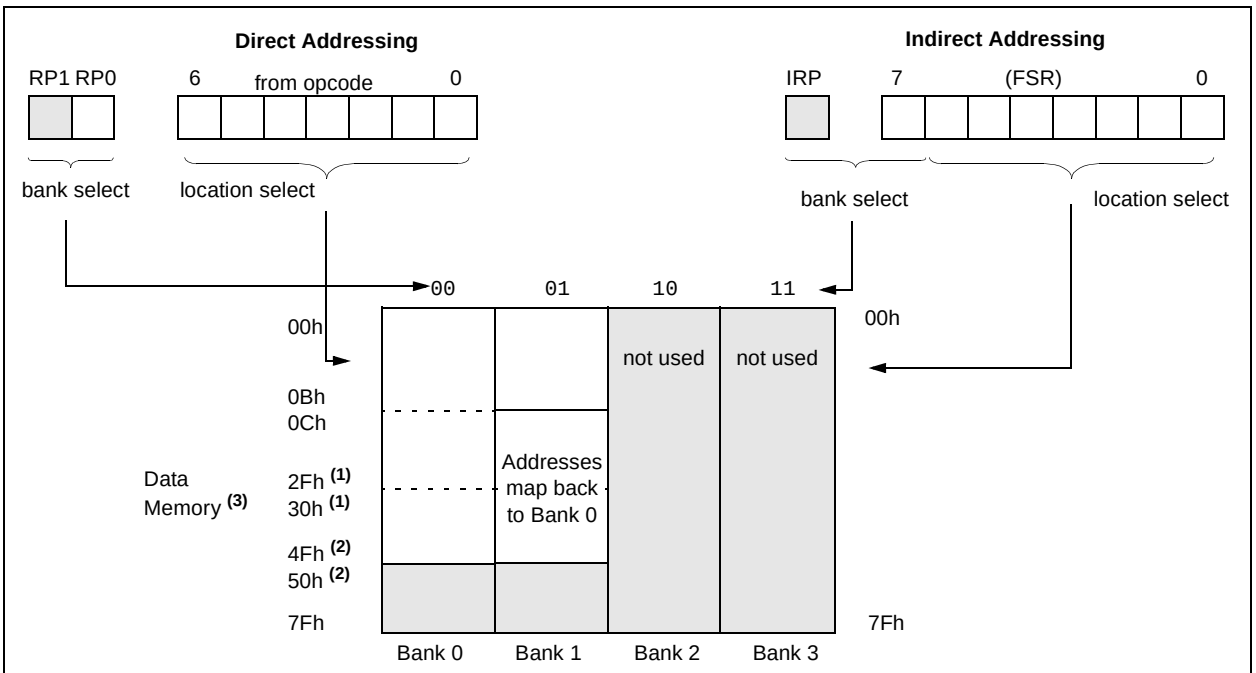

Note 1: PIC16F83 and PIC16CR83 devices.
2: PIC16F84 and PIC16CR84 devices
3: For memory map detail see Figure 4-1.

NOTES:

© 1998 Microchip Technology Inc.

5.0 I/O PORTS

The PIC16F8X has two ports, PORTA and PORTB. Some port pins are multiplexed with an alternate function for other features on the device.

5.1 PORTA and TRISA Registers

PORTA is a 5-bit wide latch. RA4 is a Schmitt Trigger input and an open drain output. All other RA port pins have TTL input levels and full CMOS output drivers. All pins have data direction bits (TRIS registers) which can configure these pins as output or input.

Setting a TRISA bit (=1) will make the corresponding PORTA pin an input, i.e., put the corresponding output driver in a hi-impedance mode. Clearing a TRISA bit (=0) will make the corresponding PORTA pin an output, i.e., put the contents of the output latch on the selected pin.

Reading the PORTA register reads the status of the pins whereas writing to it will write to the port latch. All write operations are read-modify-write operations. So a write to a port implies that the port pins are first read, then this value is modified and written to the port data latch.

The RA4 pin is multiplexed with the TMR0 clock input.

FIGURE 5-1: BLOCK DIAGRAM OF PINS RA3:RA0

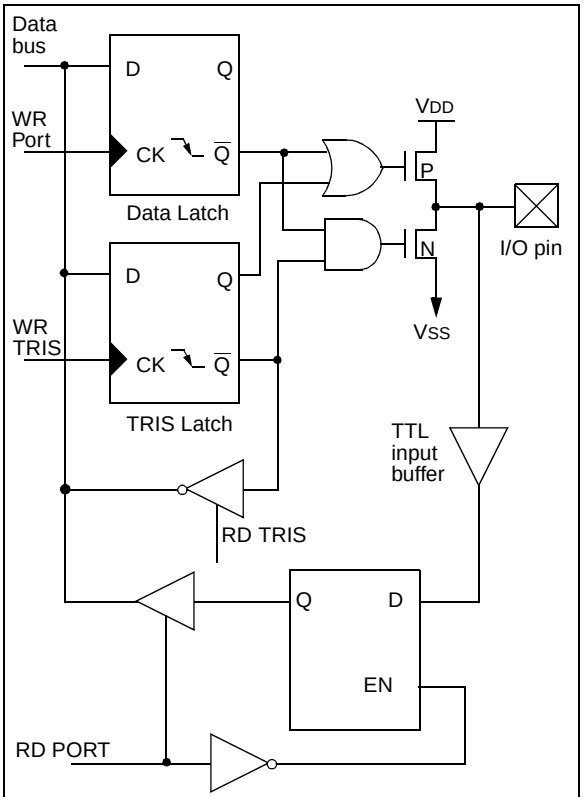

Note: I/O pins have protection diodes to VDD and VSS.

EXAMPLE 5-1: INITIALIZING PORTA

```
CLRF    PORTA         ; Initialize PORTA by
                      ; setting output
                      ; data latches
BSF     STATUS, RP0   ; Select Bank 1
MOVLW   0x0F          ; Value used to
                      ; initialize data
                      ; direction
MOVWF   TRISA         ; Set RA<3:0> as inputs
                      ; RA4 as outputs
                      ; TRISA<7:5> are always
                      ; read as '0'.
```

FIGURE 5-2: BLOCK DIAGRAM OF PIN RA4

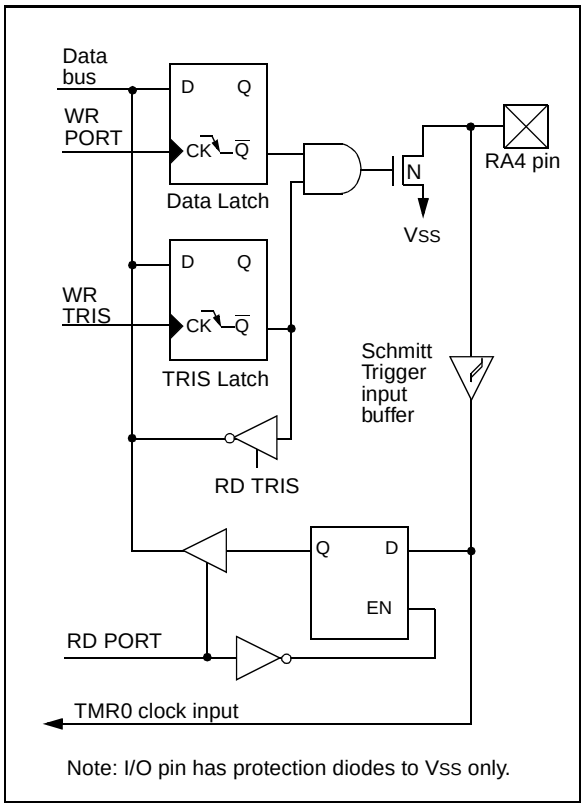

Note: I/O pin has protection diodes to VSS only.

TABLE 5-1 PORTA FUNCTIONS

Name	Bit0	Buffer Type	Function
RA0	bit0	TTL	Input/output
RA1	bit1	TTL	Input/output
RA2	bit2	TTL	Input/output
RA3	bit3	TTL	Input/output
RA4/T0CKI	bit4	ST	Input/output or external clock input for TMR0. Output is open drain type.

Legend: TTL = TTL input, ST = Schmitt Trigger input

TABLE 5-2 SUMMARY OF REGISTERS ASSOCIATED WITH PORTA

Address	Name	Bit 7	Bit 6	Bit 5	Bit 4	Bit 3	Bit 2	Bit 1	Bit 0	Value on Power-on Reset	Value on all other resets
05h	PORTA	—	—	—	RA4/T0CKI	RA3	RA2	RA1	RA0	---x xxxx	---u uuuu
85h	TRISA	—	—	—	TRISA4	TRISA3	TRISA2	TRISA1	TRISA0	---1 1111	---1 1111

Legend: x = unknown, u = unchanged, - = unimplemented read as ’0’. Shaded cells are unimplemented, read as ’0’

© 1998 Microchip Technology Inc.

5.2 PORTB and TRISB Registers

PORTB is an 8-bit wide bi-directional port. The corresponding data direction register is TRISB. A '1' on any bit in the TRISB register puts the corresponding output driver in a hi-impedance mode. A '0' on any bit in the TRISB register puts the contents of the output latch on the selected pin(s).

Each of the PORTB pins have a weak internal pull-up. A single control bit can turn on all the pull-ups. This is done by clearing the $\overline{\text{RBPU}}$ (OPTION_REG<7>) bit. The weak pull-up is automatically turned off when the port pin is configured as an output. The pull-ups are disabled on a Power-on Reset.

Four of PORTB's pins, RB7:RB4, have an interrupt on change feature. Only pins configured as inputs can cause this interrupt to occur (i.e., any RB7:RB4 pin configured as an output is excluded from the interrupt on change comparison). The pins value in input mode are compared with the old value latched on the last read of PORTB. The "mismatch" outputs of the pins are OR'ed together to generate the RB port change interrupt.

FIGURE 5-3: BLOCK DIAGRAM OF PINS RB7:RB4

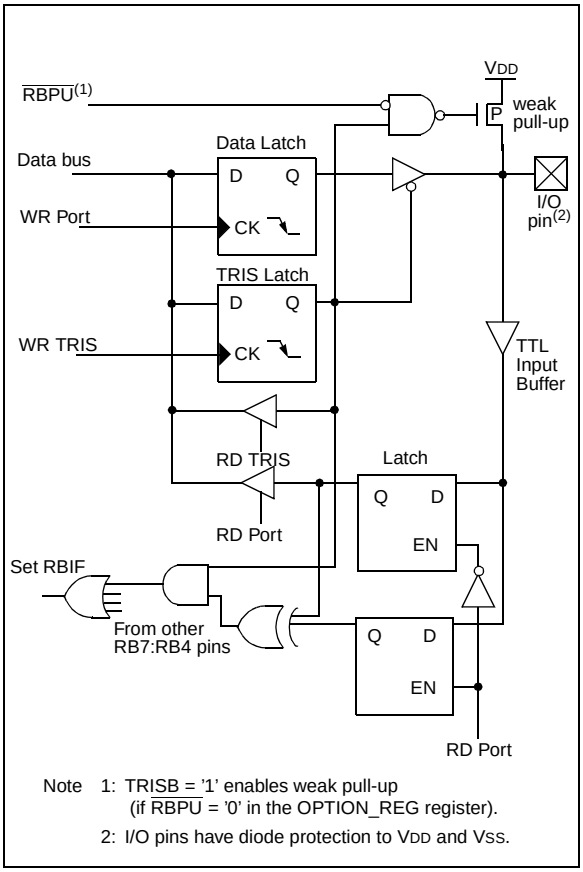

This interrupt can wake the device from SLEEP. The user, in the interrupt service routine, can clear the interrupt in the following manner:

a) Read (or write) PORTB. This will end the mismatch condition.

b) Clear flag bit RBIF.

A mismatch condition will continue to set the RBIF bit. Reading PORTB will end the mismatch condition, and allow the RBIF bit to be cleared.

This interrupt on mismatch feature, together with software configurable pull-ups on these four pins allow easy interface to a key pad and make it possible for wake-up on key-depression (see AN552 in the Embedded Control Handbook).

> **Note 1:** For a change on the I/O pin to be recognized, the pulse width must be at least T_{CY} (4/f_{OSC}) wide.

The interrupt on change feature is recommended for wake-up on key depression operation and operations where PORTB is only used for the interrupt on change feature. Polling of PORTB is not recommended while using the interrupt on change feature.

FIGURE 5-4: BLOCK DIAGRAM OF PINS RB3:RB0

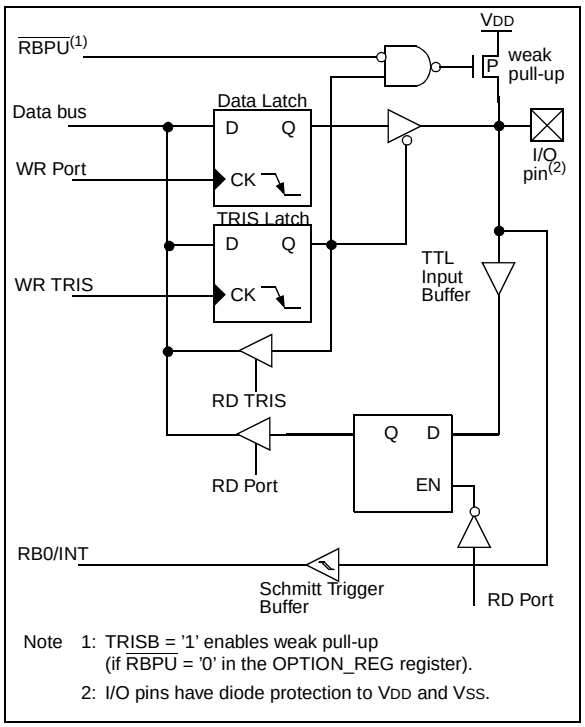

EXAMPLE 5-1: INITIALIZING PORTB

```
CLRF   PORTB        ; Initialize PORTB by
                    ; setting output
                    ; data latches
BSF    STATUS, RP0  ; Select Bank 1
MOVLW  0xCF         ; Value used to
                    ; initialize data
                    ; direction
MOVWF  TRISB        ; Set RB<3:0> as inputs
                    ; RB<5:4> as outputs
                    ; RB<7:6> as inputs
```

TABLE 5-3 PORTB FUNCTIONS

Name	Bit	Buffer Type	I/O Consistency Function
RB0/INT	bit0	TTL/ST(1)	Input/output pin or external interrupt input. Internal software programmable weak pull-up.
RB1	bit1	TTL	Input/output pin. Internal software programmable weak pull-up.
RB2	bit2	TTL	Input/output pin. Internal software programmable weak pull-up.
RB3	bit3	TTL	Input/output pin. Internal software programmable weak pull-up.
RB4	bit4	TTL	Input/output pin (with interrupt on change). Internal software programmable weak pull-up.
RB5	bit5	TTL	Input/output pin (with interrupt on change). Internal software programmable weak pull-up.
RB6	bit6	TTL/ST(2)	Input/output pin (with interrupt on change). Internal software programmable weak pull-up. Serial programming clock.
RB7	bit7	TTL/ST(2)	Input/output pin (with interrupt on change). Internal software programmable weak pull-up. Serial programming data.

Legend: TTL = TTL input, ST = Schmitt Trigger.
Note 1: This buffer is a Schmitt Trigger input when configured as the external interrupt.
2: This buffer is a Schmitt Trigger input when used in serial programming mode.

TABLE 5-4 SUMMARY OF REGISTERS ASSOCIATED WITH PORTB

Address	Name	Bit 7	Bit 6	Bit 5	Bit 4	Bit 3	Bit 2	Bit 1	Bit 0	Value on Power-on Reset	Value on all other resets
06h	PORTB	RB7	RB6	RB5	RB4	RB3	RB2	RB1	RB0/INT	xxxx xxxx	uuuu uuuu
86h	TRISB	TRISB7	TRISB6	TRISB5	TRISB4	TRISB3	TRISB2	TRISB1	TRISB0	1111 1111	1111 1111
81h	OPTION_REG	$\overline{\text{RBPU}}$	INTEDG	T0CS	T0SE	PSA	PS2	PS1	PS0	1111 1111	1111 1111

Legend: x = unknown, u = unchanged. Shaded cells are not used by PORTB.

© 1998 Microchip Technology Inc.

5.3 I/O Programming Considerations

5.3.1 BI-DIRECTIONAL I/O PORTS

Any instruction which writes, operates internally as a read followed by a write operation. The BCF and BSF instructions, for example, read the register into the CPU, execute the bit operation and write the result back to the register. Caution must be used when these instructions are applied to a port with both inputs and outputs defined. For example, a BSF operation on bit5 of PORTB will cause all eight bits of PORTB to be read into the CPU. Then the BSF operation takes place on bit5 and PORTB is written to the output latches. If another bit of PORTB is used as a bi-directional I/O pin (i.e., bit0) and it is defined as an input at this time, the input signal present on the pin itself would be read into the CPU and rewritten to the data latch of this particular pin, overwriting the previous content. As long as the pin stays in the input mode, no problem occurs. However, if bit0 is switched into output mode later on, the content of the data latch is unknown.

Reading the port register, reads the values of the port pins. Writing to the port register writes the value to the port latch. When using read-modify-write instructions (i.e., BCF, BSF, etc.) on a port, the value of the port pins is read, the desired operation is done to this value, and this value is then written to the port latch.

A pin actively outputting a Low or High should not be driven from external devices at the same time in order to change the level on this pin ("wired-or", "wired-and"). The resulting high output current may damage the chip.

5.3.2 SUCCESSIVE OPERATIONS ON I/O PORTS

The actual write to an I/O port happens at the end of an instruction cycle, whereas for reading, the data must be valid at the beginning of the instruction cycle (Figure 5-5). Therefore, care must be exercised if a write followed by a read operation is carried out on the same I/O port. The sequence of instructions should be such that the pin voltage stabilizes (load dependent) before the next instruction which causes that file to be read into the CPU is executed. Otherwise, the previous state of that pin may be read into the CPU rather than the new state. When in doubt, it is better to separate these instructions with a NOP or another instruction not accessing this I/O port.

Example 5-1 shows the effect of two sequential read-modify-write instructions (e.g., BCF, BSF, etc.) on an I/O port.

EXAMPLE 5-1: READ-MODIFY-WRITE INSTRUCTIONS ON AN I/O PORT

```
;Initial PORT settings: PORTB<7:4> Inputs
;                       PORTB<3:0> Outputs
;PORTB<7:6> have external pull-ups and are
;not connected to other circuitry
;
;                     PORT latch  PORT pins
;                     ----------  ---------
  BCF PORTB, 7      ; 01pp ppp    11pp ppp
  BCF PORTB, 6      ; 10pp ppp    11pp ppp
  BSF STATUS, RP0   ;
  BCF TRISB, 7      ; 10pp ppp    11pp ppp
  BCF TRISB, 6      ; 10pp ppp    10pp ppp
;
;Note that the user may have expected the
;pin values to be 00pp ppp. The 2nd BCF
;caused RB7 to be latched as the pin value
;(high).
```

FIGURE 5-5: SUCCESSIVE I/O OPERATION

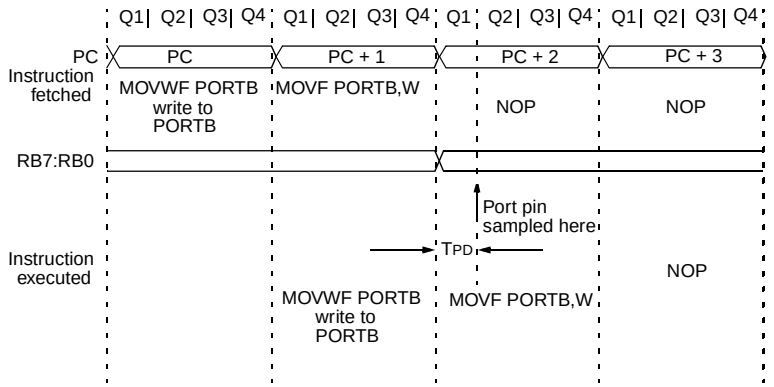

Note:

This example shows a write to PORTB followed by a read from PORTB.

Note that:

data setup time = (0.25TCY - TPD)

where TCY = instruction cycle
TPD = propagation delay

Therefore, at higher clock frequencies, a write followed by a read may be problematic.

NOTES:

© 1998 Microchip Technology Inc.

6.0 TIMER0 MODULE AND TMR0 REGISTER

The Timer0 module timer/counter has the following features:

- 8-bit timer/counter
- Readable and writable
- 8-bit software programmable prescaler
- Internal or external clock select
- Interrupt on overflow from FFh to 00h
- Edge select for external clock

Timer mode is selected by clearing the T0CS bit (OPTION_REG<5>). In timer mode, the Timer0 module (Figure 6-1) will increment every instruction cycle (without prescaler). If the TMR0 register is written, the increment is inhibited for the following two cycles (Figure 6-2 and Figure 6-3). The user can work around this by writing an adjusted value to the TMR0 register.

Counter mode is selected by setting the T0CS bit (OPTION_REG<5>). In this mode TMR0 will increment either on every rising or falling edge of pin RA4/T0CKI. The incrementing edge is determined by the T0 source edge select bit, T0SE (OPTION_REG<4>). Clearing bit T0SE selects the rising edge. Restrictions on the external clock input are discussed in detail in Section 6.2.

The prescaler is shared between the Timer0 Module and the Watchdog Timer. The prescaler assignment is controlled, in software, by control bit PSA (OPTION_REG<3>). Clearing bit PSA will assign the prescaler to the Timer0 Module. The prescaler is not readable or writable. When the prescaler (Section 6.3) is assigned to the Timer0 Module, the prescale value (1:2, 1:4, ..., 1:256) is software selectable.

6.1 TMR0 Interrupt

The TMR0 interrupt is generated when the TMR0 register overflows from FFh to 00h. This overflow sets the T0IF bit (INTCON<2>). The interrupt can be masked by clearing enable bit T0IE (INTCON<5>). The T0IF bit must be cleared in software by the Timer0 Module interrupt service routine before re-enabling this interrupt. The TMR0 interrupt (Figure 6-4) cannot wake the processor from SLEEP since the timer is shut off during SLEEP.

FIGURE 6-1: TMR0 BLOCK DIAGRAM

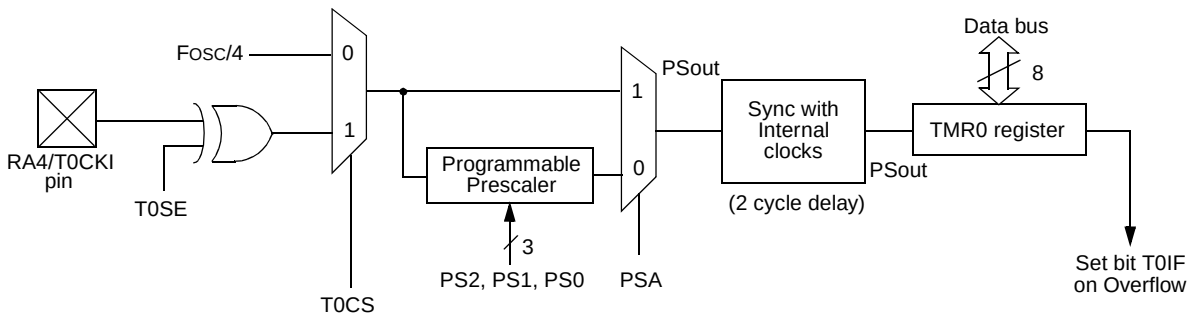

Note 1: Bits T0CS, T0SE, PS2, PS1, PS0 and PSA are located in the OPTION_REG register.
2: The prescaler is shared with the Watchdog Timer (Figure 6-6)

FIGURE 6-2: TMR0 TIMING: INTERNAL CLOCK/NO PRESCALER

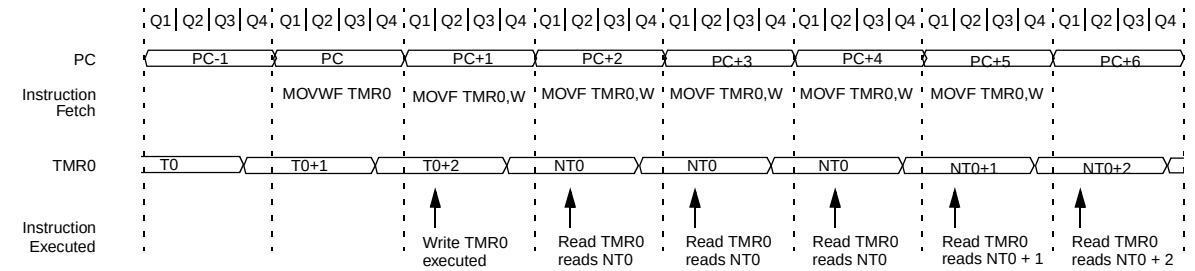

FIGURE 6-3: TMR0 TIMING: INTERNAL CLOCK/PRESCALE 1:2

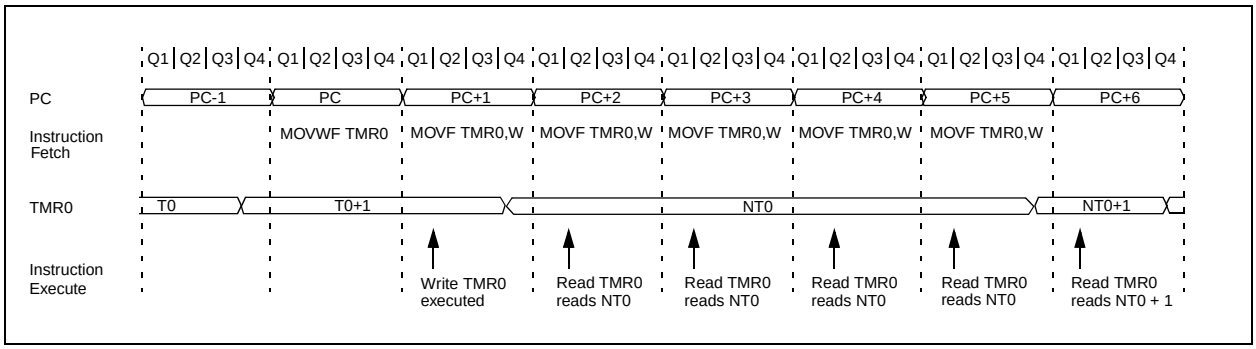

FIGURE 6-4: TMR0 INTERRUPT TIMING

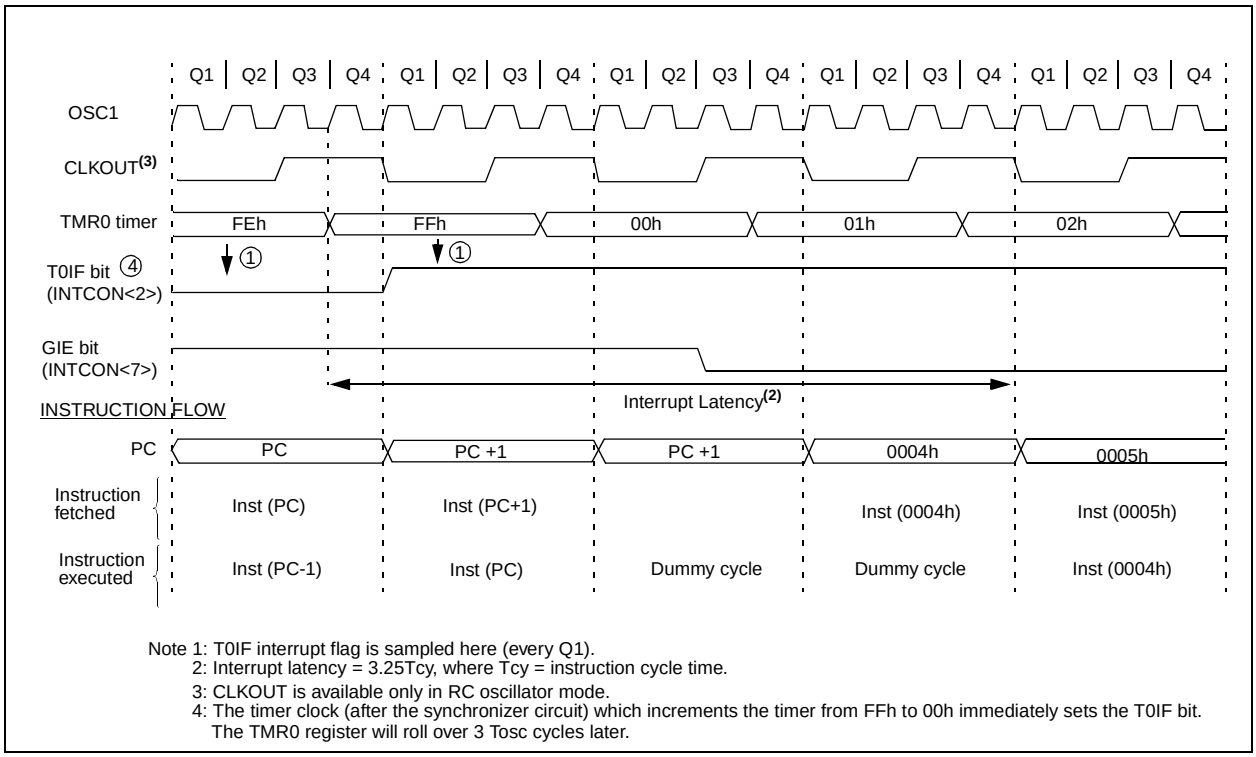

Note 1: T0IF interrupt flag is sampled here (every Q1).
2: Interrupt latency = 3.25Tcy, where Tcy = instruction cycle time.
3: CLKOUT is available only in RC oscillator mode.
4: The timer clock (after the synchronizer circuit) which increments the timer from FFh to 00h immediately sets the T0IF bit. The TMR0 register will roll over 3 Tosc cycles later.

© 1998 Microchip Technology Inc.

6.2 Using TMR0 with External Clock

When an external clock input is used for TMR0, it must meet certain requirements. The external clock requirement is due to internal phase clock (TOSC) synchronization. Also, there is a delay in the actual incrementing of the TMR0 register after synchronization.

6.2.1 EXTERNAL CLOCK SYNCHRONIZATION

When no prescaler is used, the external clock input is the same as the prescaler output. The synchronization of pin RA4/T0CKI with the internal phase clocks is accomplished by sampling the prescaler output on the Q2 and Q4 cycles of the internal phase clocks (Figure 6-5). Therefore, it is necessary for T0CKI to be high for at least 2Tosc (plus a small RC delay) and low for at least 2Tosc (plus a small RC delay). Refer to the electrical specification of the desired device.

When a prescaler is used, the external clock input is divided by an asynchronous ripple counter type prescaler so that the prescaler output is symmetrical. For the external clock to meet the sampling requirement, the ripple counter must be taken into account. Therefore, it is necessary for T0CKI to have a period of at least 4Tosc (plus a small RC delay) divided by the prescaler value. The only requirement on T0CKI high and low time is that they do not violate the minimum pulse width requirement of 10 ns. Refer to parameters 40, 41 and 42 in the AC Electrical Specifications of the desired device.

6.2.2 TMR0 INCREMENT DELAY

Since the prescaler output is synchronized with the internal clocks, there is a small delay from the time the external clock edge occurs to the time the Timer0 Module is actually incremented. Figure 6-5 shows the delay from the external clock edge to the timer incrementing.

6.3 Prescaler

An 8-bit counter is available as a prescaler for the Timer0 Module, or as a postscaler for the Watchdog Timer (Figure 6-6). For simplicity, this counter is being referred to as “prescaler” throughout this data sheet. Note that there is only one prescaler available which is mutually exclusive between the Timer0 Module and the Watchdog Timer. Thus, a prescaler assignment for the Timer0 Module means that there is no prescaler for the Watchdog Timer, and vice-versa.

The PSA and PS2:PS0 bits (OPTION_REG<3:0>) determine the prescaler assignment and prescale ratio.

When assigned to the Timer0 Module, all instructions writing to the Timer0 Module (e.g., `CLRF 1`, `MOVWF 1`, `BSF 1,x` ....etc.) will clear the prescaler. When assigned to WDT, a `CLRWDT` instruction will clear the prescaler along with the Watchdog Timer. The prescaler is not readable or writable.

FIGURE 6-5: TIMER0 TIMING WITH EXTERNAL CLOCK

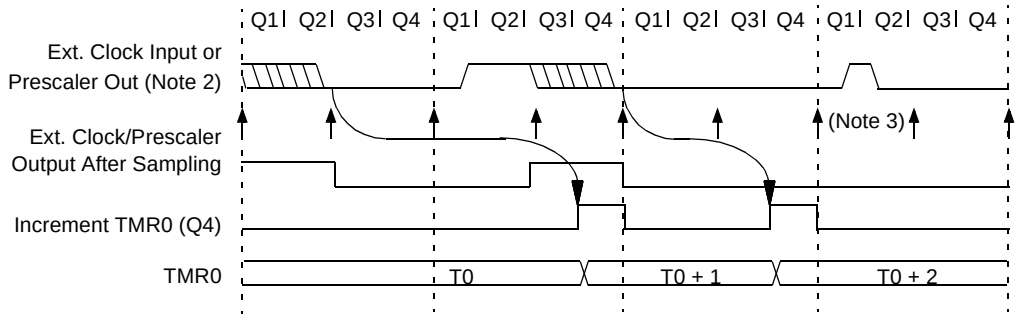

Note 1: Delay from clock input change to TMR0 increment is 3Tosc to 7Tosc. (Duration of Q = Tosc). Therefore, the error in measuring the interval between two edges on TMR0 input = ± 4Tosc max.
2: External clock if no prescaler selected, Prescaler output otherwise.
3: The arrows ↑ indicate where sampling occurs. A small clock pulse may be missed by sampling.

FIGURE 6-6: BLOCK DIAGRAM OF THE TMR0/WDT PRESCALER

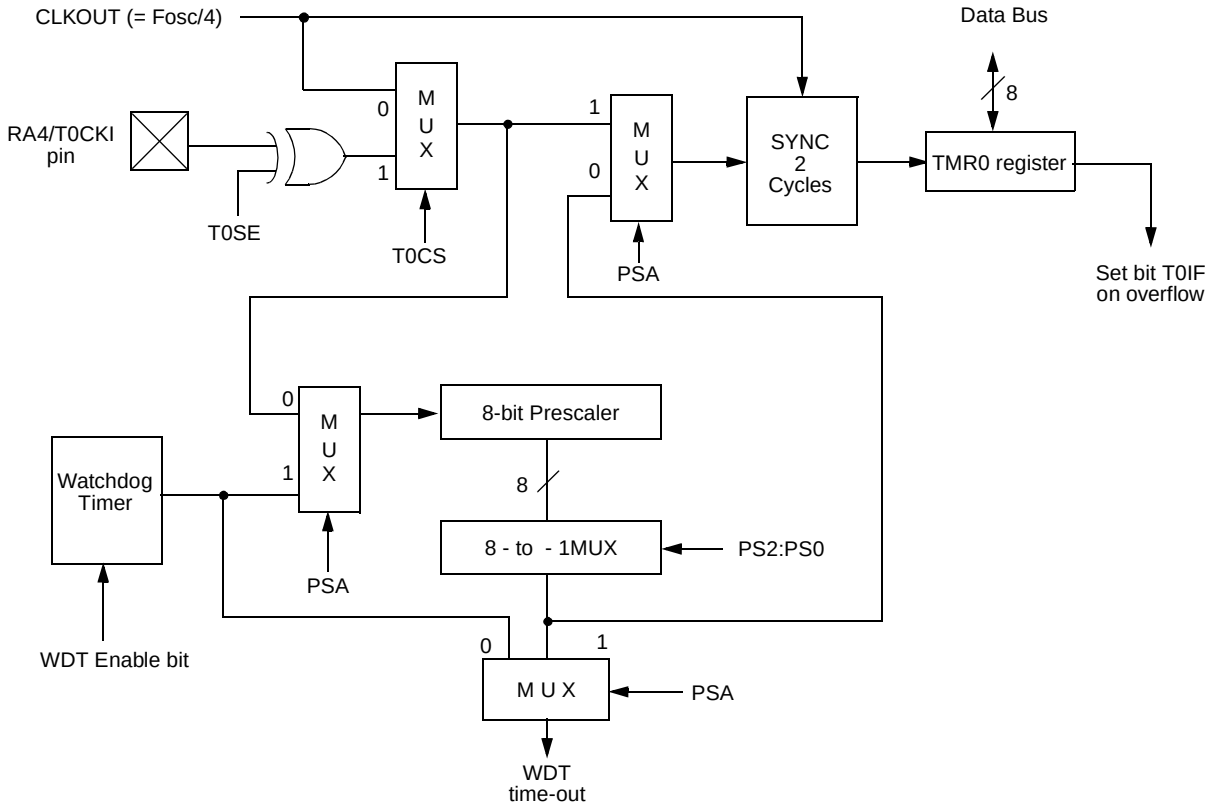

Note: T0CS, T0SE, PSA, PS2:PS0 are bits in the OPTION_REG register.

© 1998 Microchip Technology Inc.

6.3.1 SWITCHING PRESCALER ASSIGNMENT

The prescaler assignment is fully under software control (i.e., it can be changed “on the fly” during program execution).

Note: To avoid an unintended device RESET, the following instruction sequence (Example 6-1) must be executed when changing the prescaler assignment from Timer0 to the WDT. This sequence must be taken even if the WDT is disabled. To change prescaler from the WDT to the Timer0 module use the sequence shown in Example 6-2.

EXAMPLE 6-1: CHANGING PRESCALER (TIMER0→WDT)

```
BCF     STATUS, RP0  ;Bank 0
CLRF    TMR0         ;Clear TMR0
                     ; and Prescaler
BSF     STATUS, RP0  ;Bank 1
CLRWDT               ;Clears WDT
MOVLW   b’xxxx1xxx’  ;Select new
MOVWF   OPTION_REG       ; prescale value
BCF     STATUS, RP0  ;Bank 0
```

EXAMPLE 6-2: CHANGING PRESCALER (WDT→TIMER0)

```
CLRWDT               ;Clear WDT and
                     ; prescaler
BSF     STATUS, RP0  ;Bank 1
MOVLW   b’xxxx0xxx’  ;Select TMR0, new
                     ; prescale value
                     ’ and clock source
MOVWF   OPTION_REG       ;
BCF     STATUS, RP0  ;Bank 0
```

TABLE 6-1 REGISTERS ASSOCIATED WITH TIMER0

Address	Name	Bit 7	Bit 6	Bit 5	Bit 4	Bit 3	Bit 2	Bit 1	Bit 0	Value on Power-on Reset	Value on all other resets
01h	TMR0	Timer0 module’s register								xxxx xxxx	uuuu uuuu
0Bh	INTCON	GIE	EEIE	T0IE	INTE	RBIE	T0IF	INTF	RBIF	0000 000x	0000 0000
81h	OPTION_REG	$\overline{\text{RBPU}}$	INTEDG	T0CS	T0SE	PSA	PS2	PS1	PS0	1111 1111	1111 1111
85h	TRISA	—	—	—	TRISA4	TRISA3	TRISA2	TRISA1	TRISA0	---1 1111	---1 1111

Legend: x = unknown, u = unchanged. - = unimplemented read as ’0’. Shaded cells are not associated with Timer0.

NOTES:

© 1998 Microchip Technology Inc.

7.0 DATA EEPROM MEMORY

The EEPROM data memory is readable and writable during normal operation (full VDD range). This memory is not directly mapped in the register file space. Instead it is indirectly addressed through the Special Function Registers. There are four SFRs used to read and write this memory. These registers are:

- EECON1
- EECON2
- EEDATA
- EEADR

EEDATA holds the 8-bit data for read/write, and EEADR holds the address of the EEPROM location being accessed. PIC16F8X devices have 64 bytes of data EEPROM with an address range from 0h to 3Fh.

The EEPROM data memory allows byte read and write. A byte write automatically erases the location and writes the new data (erase before write). The EEPROM data memory is rated for high erase/write cycles. The write time is controlled by an on-chip timer. The write-time will vary with voltage and temperature as well as from chip to chip. Please refer to AC specifications for exact limits.

When the device is code protected, the CPU may continue to read and write the data EEPROM memory. The device programmer can no longer access this memory.

7.1 EEADR

The EEADR register can address up to a maximum of 256 bytes of data EEPROM. Only the first 64 bytes of data EEPROM are implemented.

The upper two bits are address decoded. This means that these two bits must always be '0' to ensure that the address is in the 64 byte memory space.

FIGURE 7-1: EECON1 REGISTER (ADDRESS 88h)

U	U	U	R/W-0	R/W-x	R/W-0	R/S-0	R/S-x
—	—	—	EEIF	WRERR	WREN	WR	RD
bit7							bit0

R = Readable bit
W = Writable bit
S = Settable bit
U = Unimplemented bit, read as ‘0’
- n = Value at POR reset

bit 7:5 **Unimplemented:** Read as ’0’

bit 4 **EEIF**: EEPROM Write Operation Interrupt Flag bit
1 = The write operation completed (must be cleared in software)
0 = The write operation is not complete or has not been started

bit 3 **WRERR**: EEPROM Error Flag bit
1 = A write operation is prematurely terminated (any $\overline{\text{MCLR}}$ reset or any WDT reset during normal operation)
0 = The write operation completed

bit 2 **WREN**: EEPROM Write Enable bit
1 = Allows write cycles
0 = Inhibits write to the data EEPROM

bit 1 **WR**: Write Control bit
1 = initiates a write cycle. (The bit is cleared by hardware once write is complete. The WR bit can only be set (not cleared) in software.
0 = Write cycle to the data EEPROM is complete

bit 0 **RD**: Read Control bit
1 = Initiates an EEPROM read (read takes one cycle. RD is cleared in hardware. The RD bit can only be set (not cleared) in software).
0 = Does not initiate an EEPROM read

7.2 EECON1 and EECON2 Registers

EECON1 is the control register with five low order bits physically implemented. The upper-three bits are non-existent and read as '0's.

Control bits RD and WR initiate read and write, respectively. These bits cannot be cleared, only set, in software. They are cleared in hardware at completion of the read or write operation. The inability to clear the WR bit in software prevents the accidental, premature termination of a write operation.

The WREN bit, when set, will allow a write operation. On power-up, the WREN bit is clear. The WRERR bit is set when a write operation is interrupted by a $\overline{\text{MCLR}}$ reset or a WDT time-out reset during normal operation. In these situations, following reset, the user can check the WRERR bit and rewrite the location. The data and address will be unchanged in the EEDATA and EEADR registers.

Interrupt flag bit EEIF is set when write is complete. It must be cleared in software.

EECON2 is not a physical register. Reading EECON2 will read all '0's. The EECON2 register is used exclusively in the Data EEPROM write sequence.

7.3 Reading the EEPROM Data Memory

To read a data memory location, the user must write the address to the EEADR register and then set control bit RD (EECON1<0>). The data is available, in the very next cycle, in the EEDATA register; therefore it can be read in the next instruction. EEDATA will hold this value until another read or until it is written to by the user (during a write operation).

EXAMPLE 7-1: DATA EEPROM READ

```
BCF     STATUS, RP0  ; Bank 0
MOVLW   CONFIG_ADDR  ;
MOVWF   EEADR        ; Address to read
BSF     STATUS, RP0  ; Bank 1
BSF     EECON1, RD   ; EE Read
BCF     STATUS, RP0  ; Bank 0
MOVF    EEDATA, W    ; W = EEDATA
```

7.4 Writing to the EEPROM Data Memory

To write an EEPROM data location, the user must first write the address to the EEADR register and the data to the EEDATA register. Then the user must follow a specific sequence to initiate the write for each byte.

EXAMPLE 7-1: DATA EEPROM WRITE

```
        BSF     STATUS, RP0  ; Bank 1
        BCF     INTCON, GIE  ; Disable INTs.
        BSF     EECON1, WREN ; Enable Write
        MOVLW   55h          ;
Required MOVWF  EECON2       ; Write 55h
Sequence MOVLW  AAh          ;
        MOVWF   EECON2       ; Write AAh
        BSF     EECON1,WR    ; Set WR bit
                             ;   begin write
        BSF     INTCON, GIE  ; Enable INTs.
```

The write will not initiate if the above sequence is not exactly followed (write 55h to EECON2, write AAh to EECON2, then set WR bit) for each byte. We strongly recommend that interrupts be disabled during this code segment.

Additionally, the WREN bit in EECON1 must be set to enable write. This mechanism prevents accidental writes to data EEPROM due to errant (unexpected) code execution (i.e., lost programs). The user should keep the WREN bit clear at all times, except when updating EEPROM. The WREN bit is not cleared by hardware

After a write sequence has been initiated, clearing the WREN bit will not affect this write cycle. The WR bit will be inhibited from being set unless the WREN bit is set.

At the completion of the write cycle, the WR bit is cleared in hardware and the EE Write Complete Interrupt Flag bit (EEIF) is set. The user can either enable this interrupt or poll this bit. EEIF must be cleared by software.

© 1998 Microchip Technology Inc.

7.5 Write Verify

Depending on the application, good programming practice may dictate that the value written to the Data EEPROM should be verified (Example 7-1) to the desired value to be written. This should be used in applications where an EEPROM bit will be stressed near the specification limit. The Total Endurance disk will help determine your comfort level.

Generally the EEPROM write failure will be a bit which was written as a '1', but reads back as a '0' (due to leakage off the bit).

EXAMPLE 7-1: WRITE VERIFY

```
    BCF   STATUS, RP0 ; Bank 0
    :                 ; Any code can go here
    :                 ;
    MOVF  EEDATA, W   ; Must be in Bank 0
    BSF   STATUS, RP0 ; Bank 1
READ
    BSF   EECON1, RD  ; YES, Read the
                      ;   value written
    BCF   STATUS, RP0 ; Bank 0
;
; Is the value written (in W reg) and
;   read (in EEDATA) the same?
;
    SUBWF EEDATA, W   ;
    BTFSS STATUS, Z   ; Is difference 0?
    GOTO  WRITE_ERR   ; NO, Write error
    :                 ; YES, Good write
    :                 ; Continue program
```

7.6 Protection Against Spurious Writes

There are conditions when the device may not want to write to the data EEPROM memory. To protect against spurious EEPROM writes, various mechanisms have been built in. On power-up, WREN is cleared. Also, the Power-up Timer (72 ms duration) prevents EEPROM write.

The write initiate sequence and the WREN bit together help prevent an accidental write during brown-out, power glitch, or software malfunction.

7.7 Data EEPROM Operation during Code Protect

When the device is code protected, the CPU is able to read and write unscrambled data to the Data EEPROM.

For ROM devices, there are two code protection bits (Section 8.1). One for the ROM program memory and one for the Data EEPROM memory.

TABLE 7-1 REGISTERS/BITS ASSOCIATED WITH DATA EEPROM

Address	Name	Bit 7	Bit 6	Bit 5	Bit 4	Bit 3	Bit 2	Bit 1	Bit 0	Value on Power-on Reset	Value on all other resets
08h	EEDATA	EEPROM data register								xxxx xxxx	uuuu uuuu
09h	EEADR	EEPROM address register								xxxx xxxx	uuuu uuuu
88h	EECON1	—	—	—	EEIF	WRERR	WREN	WR	RD	---0 x000	---0 q000
89h	EECON2	EEPROM control register 2								---- ----	---- ----

Legend: x = unknown, u = unchanged, - = unimplemented read as '0', q = value depends upon condition. Shaded cells are not used by Data EEPROM.

NOTES:

© 1998 Microchip Technology Inc.

8.0 SPECIAL FEATURES OF THE CPU

What sets a microcontroller apart from other processors are special circuits to deal with the needs of real time applications. The PIC16F8X has a host of such features intended to maximize system reliability, minimize cost through elimination of external components, provide power saving operating modes and offer code protection. These features are:

- OSC Selection
- Reset
  - Power-on Reset (POR)
  - Power-up Timer (PWRT)
  - Oscillator Start-up Timer (OST)
- Interrupts
- Watchdog Timer (WDT)
- SLEEP
- Code protection
- ID locations
- In-circuit serial programming

The PIC16F8X has a Watchdog Timer which can be shut off only through configuration bits. It runs off its own RC oscillator for added reliability. There are two timers that offer necessary delays on power-up. One is the Oscillator Start-up Timer (OST), intended to keep the chip in reset until the crystal oscillator is stable. The other is the Power-up Timer (PWRT), which provides a fixed delay of 72 ms (nominal) on power-up only. This design keeps the device in reset while the power supply stabilizes. With these two timers on-chip, most applications need no external reset circuitry.

SLEEP mode offers a very low current power-down mode. The user can wake-up from SLEEP through external reset, Watchdog Timer time-out or through an interrupt. Several oscillator options are provided to allow the part to fit the application. The RC oscillator option saves system cost while the LP crystal option saves power. A set of configuration bits are used to select the various options.

8.1 Configuration Bits

The configuration bits can be programmed (read as '0') or left unprogrammed (read as '1') to select various device configurations. These bits are mapped in program memory location 2007h.

Address 2007h is beyond the user program memory space and it belongs to the special test/configuration memory space (2000h - 3FFFh). This space can only be accessed during programming.

To find out how to program the PIC16C84, refer to *PIC16C84 EEPROM Memory Programming Specification* (DS30189).

FIGURE 8-1: CONFIGURATION WORD - PIC16CR83 AND PIC16CR84

R-u	R-u	R-u	R-u	R-u	R-u	R/P-u	R-u	R-u	R-u	R-u	R-u	R-u	R-u
CP	CP	CP	CP	CP	CP	DP	CP	CP	CP	$\overline{\text{PWRTE}}$	WDTE	FOSC1	FOSC0
bit13													bit0

R = Readable bit
P = Programmable bit
- n = Value at POR reset
u = unchanged

bit 13:8 **CP**: Program Memory Code Protection bit
1 = Code protection off
0 = Program memory is code protected

bit 7 **DP**: Data Memory Code Protection bit
1 = Code protection off
0 = Data memory is code protected

bit 6:4 **CP**: Program Memory Code Protection bit
1 = Code protection off
0 = Program memory is code protected

bit 3 **$\overline{\text{PWRTE}}$**: Power-up Timer Enable bit
1 = Power-up timer is disabled
0 = Power-up timer is enabled

bit 2 **WDTE**: Watchdog Timer Enable bit
1 = WDT enabled
0 = WDT disabled

bit 1:0 **FOSC1:FOSC0**: Oscillator Selection bits
11 = RC oscillator
10 = HS oscillator
01 = XT oscillator
00 = LP oscillator

© 1998 Microchip Technology Inc.

FIGURE 8-2: CONFIGURATION WORD - PIC16F83 AND PIC16F84

R/P-u	R/P-u	R/P-u	R/P-u	R/P-u	R/P-u	R/P-u	R/P-u	R/P-u	R/P-u	R/P-u	R/P-u	R/P-u	R/P-u
CP	CP	CP	CP	CP	CP	CP	CP	CP	CP	$\overline{\text{PWRTE}}$	WDTE	FOSC1	FOSC0

bit13 bit0

R = Readable bit
P = Programmable bit
- n = Value at POR reset
u = unchanged

bit 13:4 **CP**: Code Protection bit
1 = Code protection off
0 = All memory is code protected

bit 3 **$\overline{\text{PWRTE}}$**: Power-up Timer Enable bit
1 = Power-up timer is disabled
0 = Power-up timer is enabled

bit 2 **WDTE**: Watchdog Timer Enable bit
1 = WDT enabled
0 = WDT disabled

bit 1:0 **FOSC1:FOSC0**: Oscillator Selection bits
11 = RC oscillator
10 = HS oscillator
01 = XT oscillator
00 = LP oscillator

8.2 Oscillator Configurations

8.2.1 OSCILLATOR TYPES

The PIC16F8X can be operated in four different oscillator modes. The user can program two configuration bits (FOSC1 and FOSC0) to select one of these four modes:

- LP Low Power Crystal
- XT Crystal/Resonator
- HS High Speed Crystal/Resonator
- RC Resistor/Capacitor

8.2.2 CRYSTAL OSCILLATOR / CERAMIC RESONATORS

In XT, LP or HS modes a crystal or ceramic resonator is connected to the OSC1/CLKIN and OSC2/CLKOUT pins to establish oscillation (Figure 8-3).

FIGURE 8-3: CRYSTAL/CERAMIC RESONATOR OPERATION (HS, XT OR LP OSC CONFIGURATION)

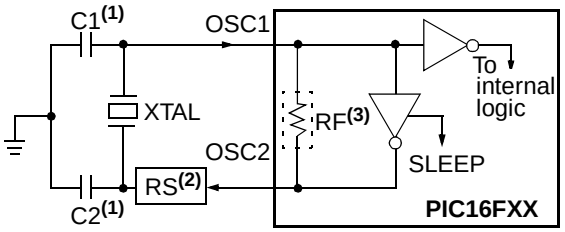

Note1: See Table 8-1 for recommended values of C1 and C2.
2: A series resistor (RS) may be required for AT strip cut crystals.
3: RF varies with the crystal chosen.

The PIC16F8X oscillator design requires the use of a parallel cut crystal. Use of a series cut crystal may give a frequency out of the crystal manufacturers specifications. When in XT, LP or HS modes, the device can have an external clock source to drive the OSC1/CLKIN pin (Figure 8-4).

FIGURE 8-4: EXTERNAL CLOCK INPUT OPERATION (HS, XT OR LP OSC CONFIGURATION)

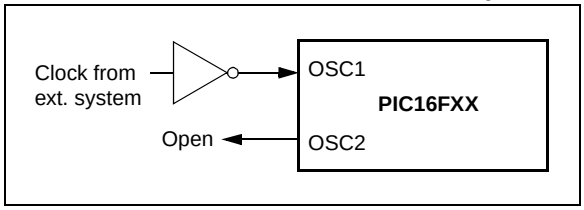

TABLE 8-1 CAPACITOR SELECTION FOR CERAMIC RESONATORS

Ranges Tested:			
Mode	**Freq**	**OSC1/C1**	**OSC2/C2**
XT	455 kHz 2.0 MHz 4.0 MHz	47 - 100 pF 15 - 33 pF 15 - 33 pF	47 - 100 pF 15 - 33 pF 15 - 33 pF
HS	8.0 MHz 10.0 MHz	15 - 33 pF 15 - 33 pF	15 - 33 pF 15 - 33 pF
Note: Recommended values of C1 and C2 are identical to the ranges tested table. Higher capacitance increases the stability of the oscillator but also increases the start-up time. These values are for design guidance only. Since each resonator has its own characteristics, the user should consult the resonator manufacturer for the appropriate values of external components.			

Resonators Tested:		
455 kHz	Panasonic EFO-A455K04B	± 0.3%
2.0 MHz	Murata Erie CSA2.00MG	± 0.5%
4.0 MHz	Murata Erie CSA4.00MG	± 0.5%
8.0 MHz	Murata Erie CSA8.00MT	± 0.5%
10.0 MHz	Murata Erie CSA10.00MTZ	± 0.5%
None of the resonators had built-in capacitors.		

TABLE 8-2 CAPACITOR SELECTION FOR CRYSTAL OSCILLATOR

Mode	Freq	OSC1/C1	OSC2/C2
LP	32 kHz 200 kHz	68 - 100 pF 15 - 33 pF	68 - 100 pF 15 - 33 pF
XT	100 kHz 2 MHz 4 MHz	100 - 150 pF 15 - 33 pF 15 - 33 pF	100 - 150 pF 15 - 33 pF 15 - 33 pF
HS	4 MHz 10 MHz	15 - 33 pF 15 - 33 pF	15 - 33 pF 15 - 33 pF
Note: Higher capacitance increases the stability of oscillator but also increases the start-up time. These values are for design guidance only. Rs may be required in HS mode as well as XT mode to avoid overdriving crystals with low drive level specification. Since each crystal has its own characteristics, the user should consult the crystal manufacturer for appropriate values of external components. For V_{DD} > 4.5V, C1 = C2 ≈ 30 pF is recommended.			

Crystals Tested:		
32.768 kHz	Epson C-001R32.768K-A	± 20 PPM
100 kHz	Epson C-2 100.00 KC-P	± 20 PPM
200 kHz	STD XTL 200.000 KHz	± 20 PPM
1.0 MHz	ECS ECS-10-13-2	± 50 PPM
2.0 MHz	ECS ECS-20-S-2	± 50 PPM
4.0 MHz	ECS ECS-40-S-4	± 50 PPM
10.0 MHz	ECS ECS-100-S-4	± 50 PPM

8.2.3 EXTERNAL CRYSTAL OSCILLATOR CIRCUIT

Either a prepackaged oscillator can be used or a simple oscillator circuit with TTL gates can be built. Prepackaged oscillators provide a wide operating range and better stability. A well-designed crystal oscillator will provide good performance with TTL gates. Two types of crystal oscillator circuits are available; one with series resonance, and one with parallel resonance.

Figure 8-5 shows a parallel resonant oscillator circuit. The circuit is designed to use the fundamental frequency of the crystal. The 74AS04 inverter performs the 180-degree phase shift that a parallel oscillator requires. The 4.7 kΩ resistor provides negative feedback for stability. The 10 kΩ potentiometer biases the 74AS04 in the linear region. This could be used for external oscillator designs.

FIGURE 8-5: EXTERNAL PARALLEL RESONANT CRYSTAL OSCILLATOR CIRCUIT

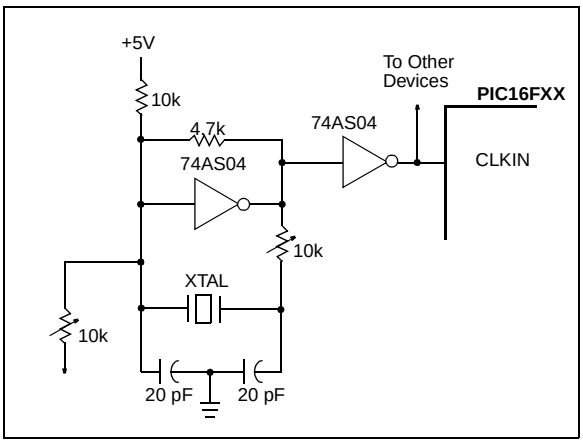

Figure 8-6 shows a series resonant oscillator circuit. This circuit is also designed to use the fundamental frequency of the crystal. The inverter performs a 180-degree phase shift. The 330 kΩ resistors provide the negative feedback to bias the inverters in their linear region.

© 1998 Microchip Technology Inc.

FIGURE 8-6: EXTERNAL SERIES RESONANT CRYSTAL OSCILLATOR CIRCUIT

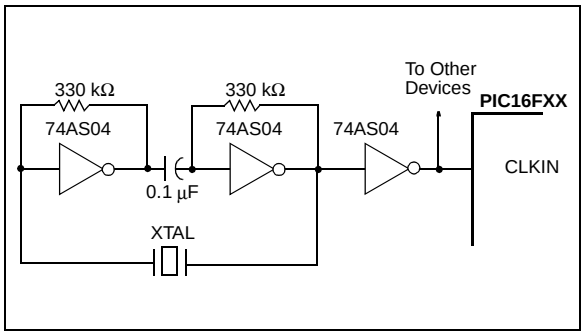

8.2.4 RC OSCILLATOR

For timing insensitive applications the RC device option offers additional cost savings. The RC oscillator frequency is a function of the supply voltage, the resistor (Rext) values, capacitor (Cext) values, and the operating temperature. In addition to this, the oscillator frequency will vary from unit to unit due to normal process parameter variation. Furthermore, the difference in lead frame capacitance between package types also affects the oscillation frequency, especially for low Cext values. The user needs to take into account variation due to tolerance of the external R and C components. Figure 8-7 shows how an R/C combination is connected to the PIC16F8X. For Rext values below 4 kΩ, the oscillator operation may become unstable, or stop completely. For very high Rext values (e.g., 1 MΩ), the oscillator becomes sensitive to noise, humidity and leakage. Thus, we recommend keeping Rext between 5 kΩ and 100 kΩ.

Although the oscillator will operate with no external capacitor (Cext = 0 pF), we recommend using values above 20 pF for noise and stability reasons. With little or no external capacitance, the oscillation frequency can vary dramatically due to changes in external capacitances, such as PCB trace capacitance or package lead frame capacitance.

See the electrical specification section for RC frequency variation from part to part due to normal process variation. The variation is larger for larger R (since leakage current variation will affect RC frequency more for large R) and for smaller C (since variation of input capacitance has a greater affect on RC frequency).

See the electrical specification section for variation of oscillator frequency due to VDD for given Rext/Cext values as well as frequency variation due to operating temperature.

The oscillator frequency, divided by 4, is available on the OSC2/CLKOUT pin, and can be used for test purposes or to synchronize other logic (see Figure 3-2 for waveform).

FIGURE 8-7: RC OSCILLATOR MODE

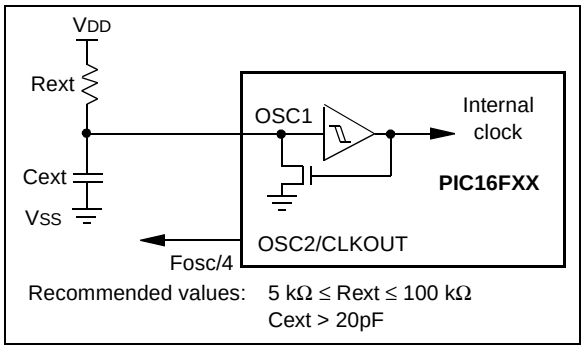

Note: When the device oscillator is in RC mode, do not drive the OSC1 pin with an external clock or you may damage the device.

8.3 Reset

The PIC16F8X differentiates between various kinds of reset:

- Power-on Reset (POR)
- $\overline{\text{MCLR}}$ reset during normal operation
- $\overline{\text{MCLR}}$ reset during SLEEP
- WDT Reset (during normal operation)
- WDT Wake-up (during SLEEP)

Figure 8-8 shows a simplified block diagram of the on-chip reset circuit. The $\overline{\text{MCLR}}$ reset path has a noise filter to ignore small pulses. The electrical specifications state the pulse width requirements for the $\overline{\text{MCLR}}$ pin.

Some registers are not affected in any reset condition; their status is unknown on a POR reset and unchanged in any other reset. Most other registers are reset to a "reset state" on POR, $\overline{\text{MCLR}}$ or WDT reset during normal operation and on $\overline{\text{MCLR}}$ reset during SLEEP. They are not affected by a WDT reset during SLEEP, since this reset is viewed as the resumption of normal operation.

Table 8-3 gives a description of reset conditions for the program counter (PC) and the STATUS register. Table 8-4 gives a full description of reset states for all registers.

The $\overline{\text{TO}}$ and $\overline{\text{PD}}$ bits are set or cleared differently in different reset situations (Section 8.7). These bits are used in software to determine the nature of the reset.

FIGURE 8-8: SIMPLIFIED BLOCK DIAGRAM OF ON-CHIP RESET CIRCUIT

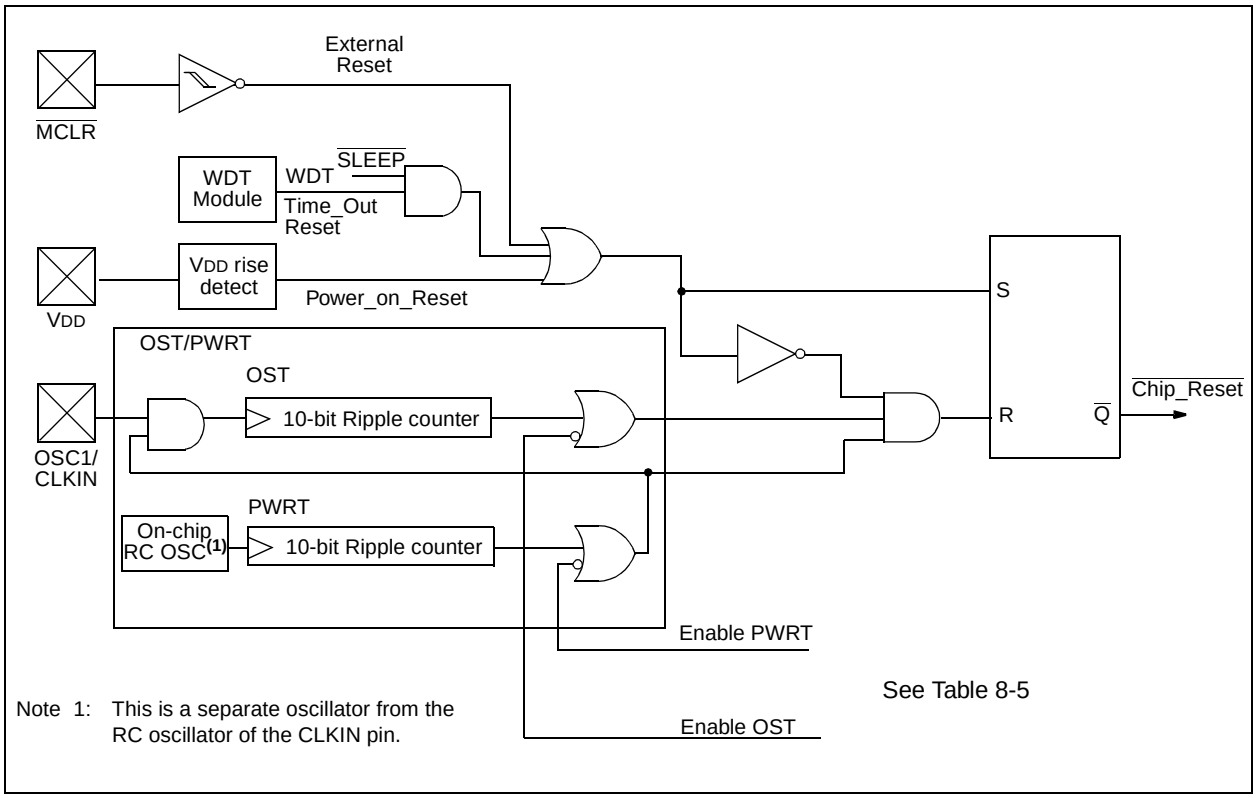

© 1998 Microchip Technology Inc.

TABLE 8-3 RESET CONDITION FOR PROGRAM COUNTER AND THE STATUS REGISTER

Condition	Program Counter	STATUS Register
Power-on Reset	000h	0001 1xxx
$\overline{\text{MCLR}}$ Reset during normal operation	000h	000u uuuu
$\overline{\text{MCLR}}$ Reset during SLEEP	000h	0001 0uuu
WDT Reset (during normal operation)	000h	0000 1uuu
WDT Wake-up	PC + 1	uuu0 0uuu
Interrupt wake-up from SLEEP	PC + 1 (1)	uuu1 0uuu

Legend: u = unchanged, x = unknown.
Note 1: When the wake-up is due to an interrupt and the GIE bit is set, the PC is loaded with the interrupt vector (0004h).

TABLE 8-4 RESET CONDITIONS FOR ALL REGISTERS

Register	Address	Power-on Reset	$\overline{\text{MCLR}}$ Reset during: – normal operation – SLEEP WDT Reset during normal operation	Wake-up from SLEEP: – through interrupt – through WDT Time-out
W	—	xxxx xxxx	uuuu uuuu	uuuu uuuu
INDF	00h	---- ----	---- ----	---- ----
TMR0	01h	xxxx xxxx	uuuu uuuu	uuuu uuuu
PCL	02h	0000h	0000h	PC + 1(2)
STATUS	03h	0001 1xxx	000q quuu(3)	uuuq quuu(3)
FSR	04h	xxxx xxxx	uuuu uuuu	uuuu uuuu
PORTA	05h	---x xxxx	---u uuuu	---u uuuu
PORTB	06h	xxxx xxxx	uuuu uuuu	uuuu uuuu
EEDATA	08h	xxxx xxxx	uuuu uuuu	uuuu uuuu
EEADR	09h	xxxx xxxx	uuuu uuuu	uuuu uuuu
PCLATH	0Ah	---0 0000	---0 0000	---u uuuu
INTCON	0Bh	0000 000x	0000 000u	uuuu uuuu(1)
INDF	80h	---- ----	---- ----	---- ----
OPTION_REG	81h	1111 1111	1111 1111	uuuu uuuu
PCL	82h	0000h	0000h	PC + 1
STATUS	83h	0001 1xxx	000q quuu(3)	uuuq quuu(3)
FSR	84h	xxxx xxxx	uuuu uuuu	uuuu uuuu
TRISA	85h	---1 1111	---1 1111	---u uuuu
TRISB	86h	1111 1111	1111 1111	uuuu uuuu
EECON1	88h	---0 x000	---0 q000	---0 uuuu
EECON2	89h	---- ----	---- ----	---- ----
PCLATH	8Ah	---0 0000	---0 0000	---u uuuu
INTCON	8Bh	0000 000x	0000 000u	uuuu uuuu(1)

Legend: u = unchanged, x = unknown, - = unimplemented bit read as '0',
q = value depends on condition.
Note 1: One or more bits in INTCON will be affected (to cause wake-up).
2: When the wake-up is due to an interrupt and the GIE bit is set, the PC is loaded with the interrupt vector (0004h).
3: Table 8-3 lists the reset value for each specific condition.

8.4 Power-on Reset (POR)

A Power-on Reset pulse is generated on-chip when VDD rise is detected (in the range of 1.2V - 1.7V). To take advantage of the POR, just tie the MCLR pin directly (or through a resistor) to VDD. This will eliminate external RC components usually needed to create Power-on Reset. A minimum rise time for VDD must be met for this to operate properly. See Electrical Specifications for details.

When the device starts normal operation (exits the reset condition), device operating parameters (voltage, frequency, temperature, ...) must be meet to ensure operation. If these conditions are not met, the device must be held in reset until the operating conditions are met.

For additional information, refer to Application Note AN607, "*Power-up Trouble Shooting*."

The POR circuit does not produce an internal reset when VDD declines.

8.5 Power-up Timer (PWRT)

The Power-up Timer (PWRT) provides a fixed 72 ms nominal time-out (TPWRT) from POR (Figure 8-10, Figure 8-11, Figure 8-12 and Figure 8-13). The Power-up Timer operates on an internal RC oscillator. The chip is kept in reset as long as the PWRT is active. The PWRT delay allows the VDD to rise to an acceptable level (Possible exception shown in Figure 8-13).

A configuration bit, PWRTE, can enable/disable the PWRT. See either Figure 8-1 or Figure 8-2 for the operation of the PWRTE bit for a particular device.

The power-up time delay TPWRT will vary from chip to chip due to VDD, temperature, and process variation. See DC parameters for details.

8.6 Oscillator Start-up Timer (OST)

The Oscillator Start-up Timer (OST) provides a 1024 oscillator cycle delay (from OSC1 input) after the PWRT delay ends (Figure 8-10, Figure 8-11, Figure 8-12 and Figure 8-13). This ensures the crystal oscillator or resonator has started and stabilized.

The OST time-out (TOST) is invoked only for XT, LP and HS modes and only on Power-on Reset or wake-up from SLEEP.

When VDD rises very slowly, it is possible that the TPWRT time-out and TOST time-out will expire before VDD has reached its final value. In this case (Figure 8-13), an external power-on reset circuit may be necessary (Figure 8-9).

FIGURE 8-9: EXTERNAL POWER-ON RESET CIRCUIT (FOR SLOW VDD POWER-UP)

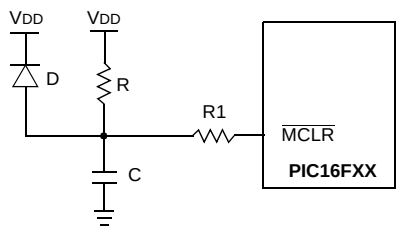

Note 1: External Power-on Reset circuit is required only if VDD power-up rate is too slow. The diode D helps discharge the capacitor quickly when VDD powers down.

2: R < 40 kΩ is recommended to make sure that voltage drop across R does not exceed 0.2V (max leakage current spec on MCLR pin is 5 μA). A larger voltage drop will degrade VIH level on the MCLR pin.

3: R1 = 100Ω to 1 kΩ will limit any current flowing into MCLR from external capacitor C in the event of an MCLR pin breakdown due to ESD or EOS.

© 1998 Microchip Technology Inc.

FIGURE 8-10: TIME-OUT SEQUENCE ON POWER-UP ($\overline{MCLR}$ NOT TIED TO V_{DD}): CASE 1

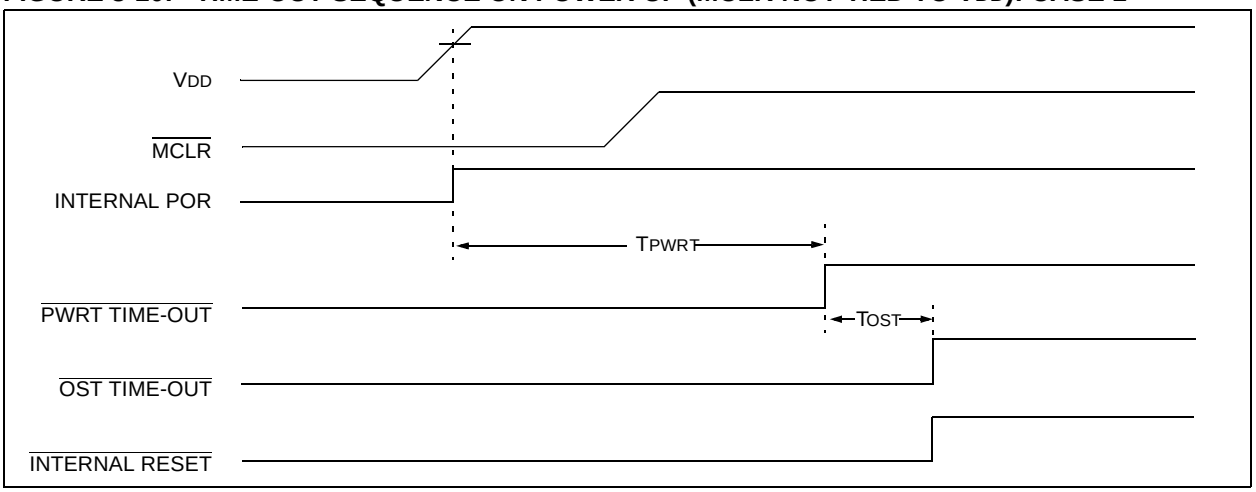

FIGURE 8-11: TIME-OUT SEQUENCE ON POWER-UP ($\overline{MCLR}$ NOT TIED TO V_{DD}): CASE 2

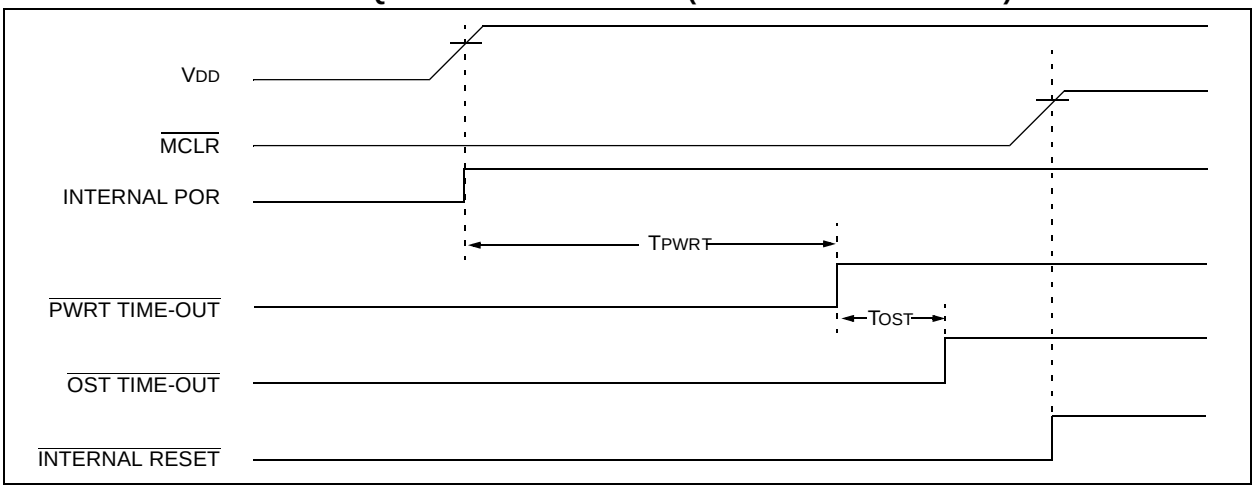

FIGURE 8-12: TIME-OUT SEQUENCE ON POWER-UP ($\overline{MCLR}$ TIED TO VDD): FAST VDD RISE TIME

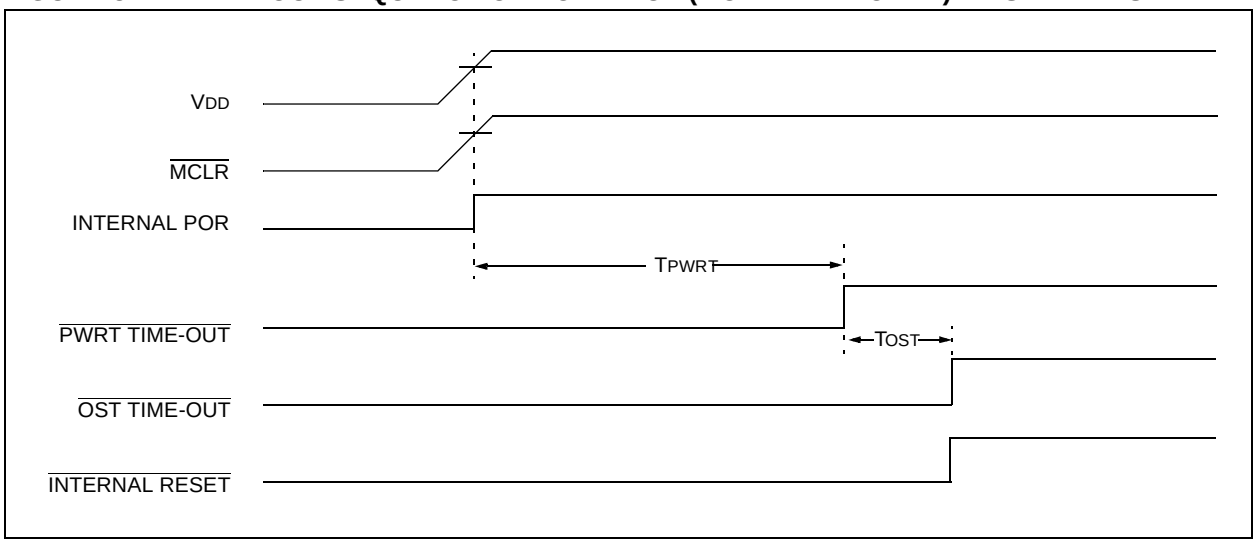

FIGURE 8-13: TIME-OUT SEQUENCE ON POWER-UP ($\overline{MCLR}$ TIED TO VDD): SLOW VDD RISE TIME

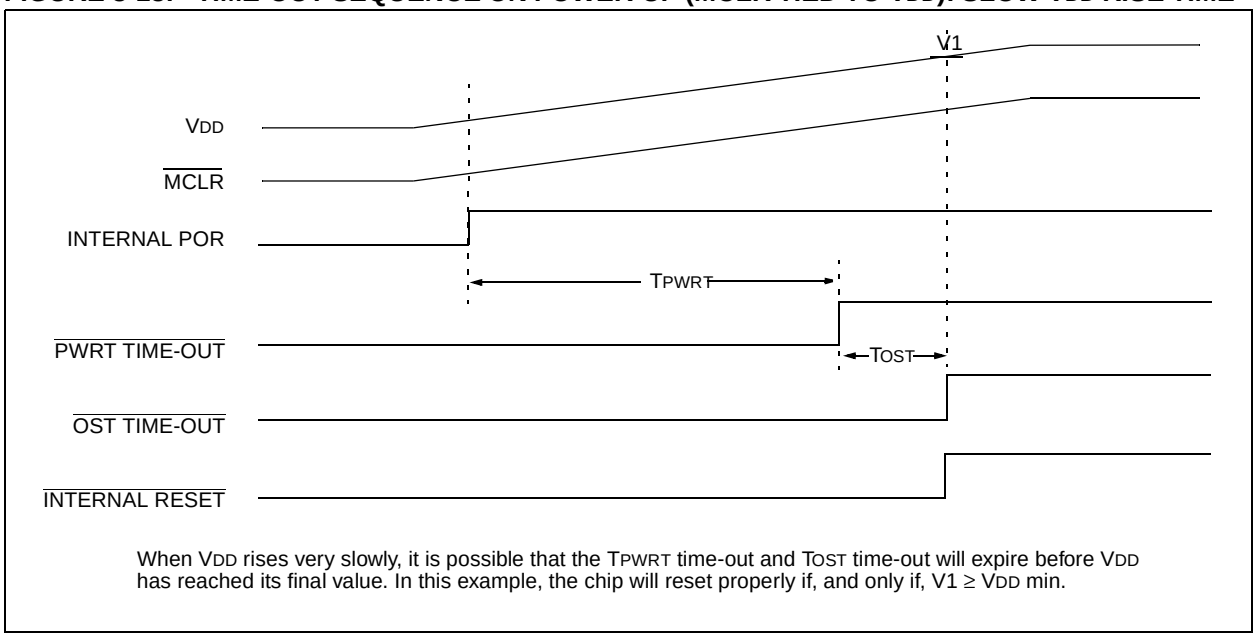

© 1998 Microchip Technology Inc.

8.7 Time-out Sequence and Power-down Status Bits ($\overline{TO}$/$\overline{PD}$)

On power-up (Figure 8-10, Figure 8-11, Figure 8-12 and Figure 8-13) the time-out sequence is as follows: First PWRT time-out is invoked after a POR has expired. Then the OST is activated. The total time-out will vary based on oscillator configuration and PWRTE configuration bit status. For example, in RC mode with the PWRT disabled, there will be no time-out at all.

TABLE 8-5 TIME-OUT IN VARIOUS SITUATIONS

Oscillator Configuration	Power-up		Wake-up from SLEEP
	PWRT Enabled	PWRT Disabled	
XT, HS, LP	72 ms + 1024TOSC	1024TOSC	1024TOSC
RC	72 ms	—	—

Since the time-outs occur from the POR reset pulse, if $\overline{MCLR}$ is kept low long enough, the time-outs will expire. Then bringing $\overline{MCLR}$ high, execution will begin immediately (Figure 8-10). This is useful for testing purposes or to synchronize more than one PIC16F8X device when operating in parallel.

Table 8-6 shows the significance of the $\overline{TO}$ and $\overline{PD}$ bits. Table 8-3 lists the reset conditions for some special registers, while Table 8-4 lists the reset conditions for all the registers.

TABLE 8-6 STATUS BITS AND THEIR SIGNIFICANCE

$\overline{TO}$	$\overline{PD}$	Condition
1	1	Power-on Reset
0	x	Illegal, $\overline{TO}$ is set on $\overline{POR}$
x	0	Illegal, $\overline{PD}$ is set on $\overline{POR}$
0	1	WDT Reset (during normal operation)
0	0	WDT Wake-up
1	1	$\overline{MCLR}$ Reset during normal operation
1	0	$\overline{MCLR}$ Reset during SLEEP or interrupt wake-up from SLEEP

8.8 Reset on Brown-Out

A brown-out is a condition where device power (VDD) dips below its minimum value, but not to zero, and then recovers. The device should be reset in the event of a brown-out.

To reset a PIC16F8X device when a brown-out occurs, external brown-out protection circuits may be built, as shown in Figure 8-14 and Figure 8-15.

FIGURE 8-14: BROWN-OUT PROTECTION CIRCUIT 1

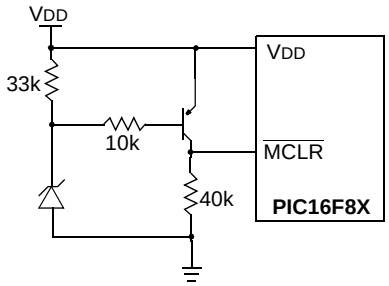

This circuit will activate reset when VDD goes below (Vz + 0.7V) where Vz = Zener voltage.

FIGURE 8-15: BROWN-OUT PROTECTION CIRCUIT 2

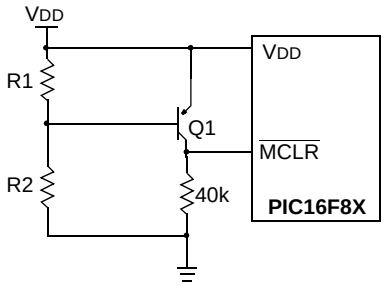

This brown-out circuit is less expensive, although less accurate. Transistor Q1 turns off when VDD is below a certain level such that:

$$V_{DD} \cdot \frac{R1}{R1 + R2} = 0.7V$$

8.9 Interrupts

The PIC16F8X has 4 sources of interrupt:

- External interrupt RB0/INT pin
- TMR0 overflow interrupt
- PORTB change interrupts (pins RB7:RB4)
- Data EEPROM write complete interrupt

The interrupt control register (INTCON) records individual interrupt requests in flag bits. It also contains the individual and global interrupt enable bits.

The global interrupt enable bit, GIE (INTCON<7>) enables (if set) all un-masked interrupts or disables (if cleared) all interrupts. Individual interrupts can be disabled through their corresponding enable bits in INTCON register. Bit GIE is cleared on reset.

The “return from interrupt” instruction, `RETFIE`, exits interrupt routine as well as sets the GIE bit, which re-enable interrupts.

The RB0/INT pin interrupt, the RB port change interrupt and the TMR0 overflow interrupt flags are contained in the INTCON register.

When an interrupt is responded to; the GIE bit is cleared to disable any further interrupt, the return address is pushed onto the stack and the PC is loaded with 0004h. For external interrupt events, such as the RB0/INT pin or PORTB change interrupt, the interrupt latency will be three to four instruction cycles. The exact latency depends when the interrupt event occurs (Figure 8-17). The latency is the same for both one and two cycle instructions. Once in the interrupt service routine the source(s) of the interrupt can be determined by polling the interrupt flag bits. The interrupt flag bit(s) must be cleared in software before re-enabling interrupts to avoid infinite interrupt requests.

Note 1: Individual interrupt flag bits are set regardless of the status of their corresponding mask bit or the GIE bit.

FIGURE 8-16: INTERRUPT LOGIC

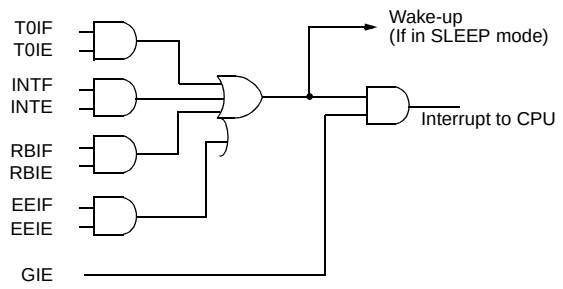

© 1998 Microchip Technology Inc.

FIGURE 8-17: INT PIN INTERRUPT TIMING

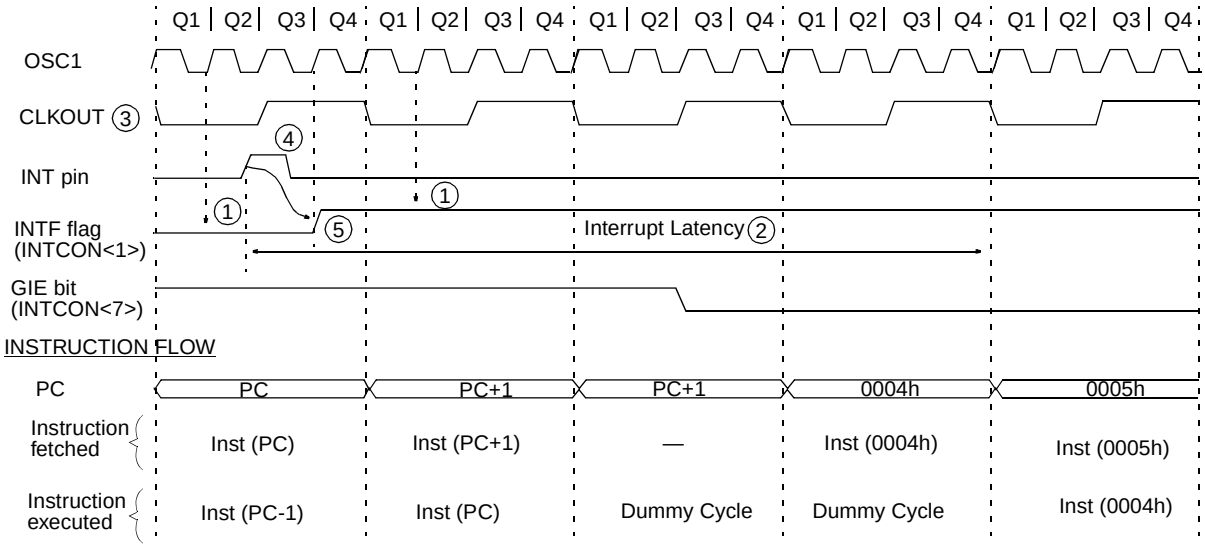

Note 1: INTF flag is sampled here (every Q1).
2: Interrupt latency = 3-4Tcy where Tcy = instruction cycle time.
Latency is the same whether Inst (PC) is a single cycle or a 2-cycle instruction.
3: CLKOUT is available only in RC oscillator mode.
4: For minimum width of INT pulse, refer to AC specs.
5: INTF is enabled to be set anytime during the Q4-Q1 cycles.

8.9.1 INT INTERRUPT

External interrupt on RB0/INT pin is edge triggered: either rising if INTEDG bit (OPTION_REG<6>) is set, or falling, if INTEDG bit is clear. When a valid edge appears on the RB0/INT pin, the INTF bit (INTCON<1>) is set. This interrupt can be disabled by clearing control bit INTE (INTCON<4>). Flag bit INTF must be cleared in software via the interrupt service routine before re-enabling this interrupt. The INT interrupt can wake the processor from SLEEP (Section 8.12) only if the INTE bit was set prior to going into SLEEP. The status of the GIE bit decides whether the processor branches to the interrupt vector following wake-up.

8.9.2 TMR0 INTERRUPT

An overflow (FFh → 00h) in TMR0 will set flag bit T0IF (INTCON<2>). The interrupt can be enabled/disabled by setting/clearing enable bit T0IE (INTCON<5>) (Section 6.0).

8.9.3 PORT RB INTERRUPT

An input change on PORTB<7:4> sets flag bit RBIF (INTCON<0>). The interrupt can be enabled/disabled by setting/clearing enable bit RBIE (INTCON<3>) (Section 5.2).

Note 1: For a change on the I/O pin to be recognized, the pulse width must be at least TCY wide.

8.10 Context Saving During Interrupts

During an interrupt, only the return PC value is saved on the stack. Typically, users wish to save key register values during an interrupt (e.g., W register and STATUS register). This is implemented in software.

Example 8-1 stores and restores the STATUS and W register's values. The User defined registers, W_TEMP and STATUS_TEMP are the temporary storage locations for the W and STATUS registers values.

Example 8-1 does the following:

a) Stores the W register.
b) Stores the STATUS register in STATUS_TEMP.
c) Executes the Interrupt Service Routine code.
d) Restores the STATUS (and bank select bit) register.
e) Restores the W register.

EXAMPLE 8-1: SAVING STATUS AND W REGISTERS IN RAM

```
PUSH    MOVWF   W_TEMP          ; Copy W to TEMP register,
        SWAPF   STATUS, W       ; Swap status to be saved into W
        MOVWF   STATUS_TEMP     ; Save status to STATUS_TEMP register
ISR     :                       :
        :                       ; Interrupt Service Routine
        :                       ;  should configure Bank as required
        :                       ;
POP     SWAPF   STATUS_TEMP, W  ; Swap nibbles in STATUS_TEMP register
                                ; and place result into W
        MOVWF   STATUS          ; Move W into STATUS register
                                ;   (sets bank to original state)
        SWAPF   W_TEMP, F       ; Swap nibbles in W_TEMP and place result in W_TEMP
        SWAPF   W_TEMP, W       ; Swap nibbles in W_TEMP and place result into W
```


© 1998 Microchip Technology Inc.

8.11 Watchdog Timer (WDT)

The Watchdog Timer is a free running on-chip RC oscillator which does not require any external components. This RC oscillator is separate from the RC oscillator of the OSC1/CLKIN pin. That means that the WDT will run even if the clock on the OSC1/CLKIN and OSC2/CLKOUT pins of the device has been stopped, for example, by execution of a SLEEP instruction. During normal operation a WDT time-out generates a device RESET. If the device is in SLEEP mode, a WDT Wake-up causes the device to wake-up and continue with normal operation. The WDT can be permanently disabled by programming configuration bit WDTE as a '0' (Section 8.1).

8.11.1 WDT PERIOD

The WDT has a nominal time-out period of 18 ms, (with no prescaler). The time-out periods vary with temperature, V_{DD} and process variations from part to part (see DC specs). If longer time-out periods are desired, a prescaler with a division ratio of up to 1:128 can be assigned to the WDT under software control by writing to the OPTION_REG register. Thus, time-out periods up to 2.3 seconds can be realized.

The CLRWDT and SLEEP instructions clear the WDT and the postscaler (if assigned to the WDT) and prevent it from timing out and generating a device RESET condition.

The $\overline{TO}$ bit in the STATUS register will be cleared upon a WDT time-out.

8.11.2 WDT PROGRAMMING CONSIDERATIONS

It should also be taken into account that under worst case conditions (V_{DD} = Min., Temperature = Max., max. WDT prescaler) it may take several seconds before a WDT time-out occurs.

FIGURE 8-18: WATCHDOG TIMER BLOCK DIAGRAM

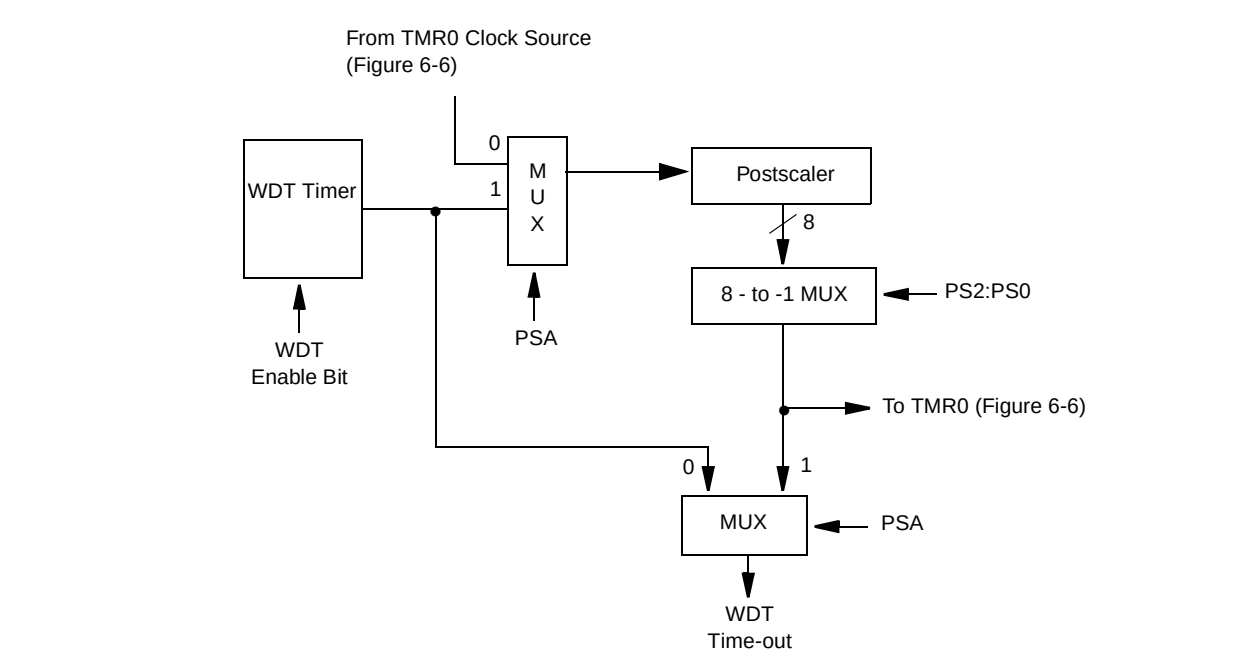

Note: PSA and PS2:PS0 are bits in the OPTION_REG register.

TABLE 8-7 SUMMARY OF REGISTERS ASSOCIATED WITH THE WATCHDOG TIMER

Address	Name	Bit 7	Bit 6	Bit 5	Bit 4	Bit 3	Bit 2	Bit 1	Bit 0	Value on Power-on Reset	Value on all other resets
2007h	Config. bits	(2)	(2)	(2)	(2)	PWRTE(1)	WDTE	FOSC1	FOSC0	(2)	
81h	OPTION_REG	$\overline{RBPU}$	INTEDG	T0CS	T0SE	PSA	PS2	PS1	PS0	1111 1111	1111 1111

Legend: x = unknown. Shaded cells are not used by the WDT.
Note 1: See Figure 8-1 and Figure 8-2 for operation of the PWRTE bit.
2: See Figure 8-1, Figure 8-2 and Section 8.13 for operation of the Code and Data protection bits.

8.12 Power-down Mode (SLEEP)

A device may be powered down (SLEEP) and later powered up (Wake-up from SLEEP).

8.12.1 SLEEP

The Power-down mode is entered by executing the SLEEP instruction.

If enabled, the Watchdog Timer is cleared (but keeps running), the $\overline{PD}$ bit (STATUS<3>) is cleared, the $\overline{TO}$ bit (STATUS<4>) is set, and the oscillator driver is turned off. The I/O ports maintain the status they had before the SLEEP instruction was executed (driving high, low, or hi-impedance).

For the lowest current consumption in SLEEP mode, place all I/O pins at either at V_{DD} or V_{SS}, with no external circuitry drawing current from the I/O pins, and disable external clocks. I/O pins that are hi-impedance inputs should be pulled high or low externally to avoid switching currents caused by floating inputs. The T0CKI input should also be at V_{DD} or V_{SS}. The contribution from on-chip pull-ups on PORTB should be considered.

The $\overline{MCLR}$ pin must be at a logic high level (V_{IHMC}).

It should be noted that a RESET generated by a WDT time-out does not drive the $\overline{MCLR}$ pin low.

8.12.2 WAKE-UP FROM SLEEP

The device can wake-up from SLEEP through one of the following events:

1. External reset input on $\overline{MCLR}$ pin.
2. WDT Wake-up (if WDT was enabled).
3. Interrupt from RB0/INT pin, RB port change, or data EEPROM write complete.

Peripherals cannot generate interrupts during SLEEP, since no on-chip Q clocks are present.

The first event ($\overline{MCLR}$ reset) will cause a device reset. The two latter events are considered a continuation of program execution. The $\overline{TO}$ and $\overline{PD}$ bits can be used to determine the cause of a device reset. The $\overline{PD}$ bit, which is set on power-up, is cleared when SLEEP is invoked. The $\overline{TO}$ bit is cleared if a WDT time-out occurred (and caused wake-up).

While the SLEEP instruction is being executed, the next instruction (PC + 1) is pre-fetched. For the device to wake-up through an interrupt event, the corresponding interrupt enable bit must be set (enabled). Wake-up occurs regardless of the state of the GIE bit. If the GIE bit is clear (disabled), the device continues execution at the instruction after the SLEEP instruction. If the GIE bit is set (enabled), the device executes the instruction after the SLEEP instruction and then branches to the interrupt address (0004h). In cases where the execution of the instruction following SLEEP is not desirable, the user should have a NOP after the SLEEP instruction.

FIGURE 8-19: WAKE-UP FROM SLEEP THROUGH INTERRUPT

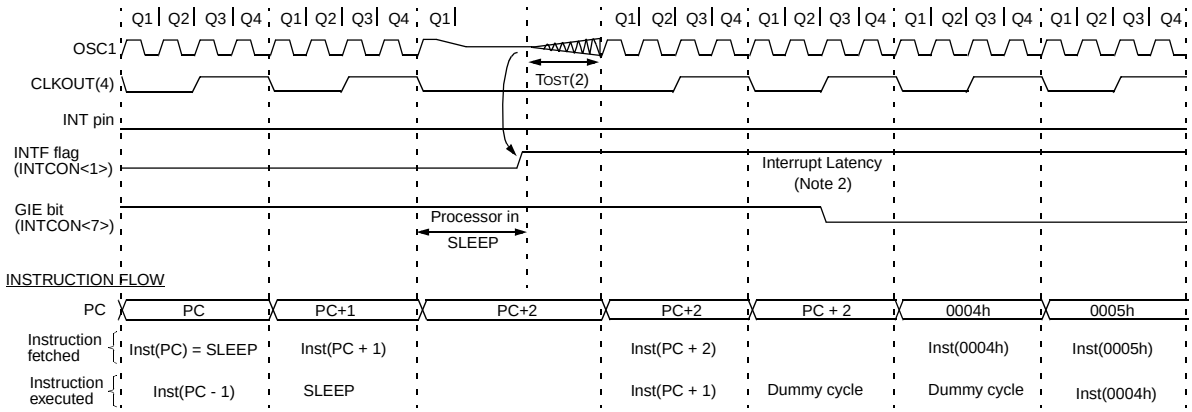

Note 1: XT, HS or LP oscillator mode assumed.
2: TOST = 1024TOSC (drawing not to scale) This delay will not be there for RC osc mode.
3: GIE = '1' assumed. In this case after wake- up, the processor jumps to the interrupt routine. If GIE = '0', execution will continue in-line.
4: CLKOUT is not available in these osc modes, but shown here for timing reference.

© 1998 Microchip Technology Inc.

8.12.3 WAKE-UP USING INTERRUPTS

When global interrupts are disabled (GIE cleared) and any interrupt source has both its interrupt enable bit and interrupt flag bit set, one of the following will occur:

- If the interrupt occurs **before** the execution of a SLEEP instruction, the SLEEP instruction will complete as a NOP. Therefore, the WDT and WDT postscaler will not be cleared, the $\overline{TO}$ bit will not be set and $\overline{PD}$ bits will not be cleared.
- If the interrupt occurs **during or after** the execution of a SLEEP instruction, the device will immediately wake up from sleep. The SLEEP instruction will be completely executed before the wake-up. Therefore, the WDT and WDT postscaler will be cleared, the $\overline{TO}$ bit will be set and the $\overline{PD}$ bit will be cleared.

Even if the flag bits were checked before executing a SLEEP instruction, it may be possible for flag bits to become set before the SLEEP instruction completes. To determine whether a SLEEP instruction executed, test the $\overline{PD}$ bit. If the $\overline{PD}$ bit is set, the SLEEP instruction was executed as a NOP.

To ensure that the WDT is cleared, a CLRWDT instruction should be executed before a SLEEP instruction.

8.13 Program Verification/Code Protection

If the code protection bit(s) have not been programmed, the on-chip program memory can be read out for verification purposes.

Note:	Microchip does not recommend code protecting widowed devices.

8.14 ID Locations

Four memory locations (2000h - 2003h) are designated as ID locations to store checksum or other code identification numbers. These locations are not accessible during normal execution but are readable and writable only during program/verify. Only the 4 least significant bits of ID location are usable.

For ROM devices, these values are submitted along with the ROM code.

8.15 In-Circuit Serial Programming

PIC16F8X microcontrollers can be serially programmed while in the end application circuit. This is simply done with two lines for clock and data, and three other lines for power, ground, and the programming voltage. Customers can manufacture boards with unprogrammed devices, and then program the microcontroller just before shipping the product, allowing the most recent firmware or custom firmware to be programmed.

The device is placed into a program/verify mode by holding the RB6 and RB7 pins low, while raising the $\overline{MCLR}$ pin from V_{IL} to V_{IHH} (see programming specification). RB6 becomes the programming clock and RB7 becomes the programming data. Both RB6 and RB7 are Schmitt Trigger inputs in this mode.

After reset, to place the device into programming/verify mode, the program counter (PC) points to location 00h. A 6-bit command is then supplied to the device, 14-bits of program data is then supplied to or from the device, using load or read-type instructions. For complete details of serial programming, please refer to the PIC16CXX Programming Specifications (Literature #DS30189).

FIGURE 8-20: TYPICAL IN-SYSTEM SERIAL PROGRAMMING CONNECTION

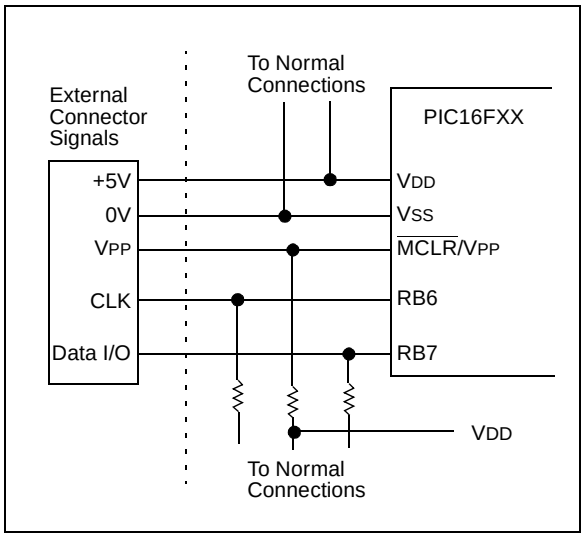

For ROM devices, both the program memory and Data EEPROM memory may be read, but only the Data EEPROM memory may be programmed.

© 1998 Microchip Technology Inc.

9.0 INSTRUCTION SET SUMMARY

Each PIC16CXX instruction is a 14-bit word divided into an OPCODE which specifies the instruction type and one or more operands which further specify the operation of the instruction. The PIC16CXX instruction set summary in Table 9-2 lists **byte-oriented**, **bit-oriented**, and **literal and control** operations. Table 9-1 shows the opcode field descriptions.

For **byte-oriented** instructions, 'f' represents a file register designator and 'd' represents a destination designator. The file register designator specifies which file register is to be used by the instruction.

The destination designator specifies where the result of the operation is to be placed. If 'd' is zero, the result is placed in the W register. If 'd' is one, the result is placed in the file register specified in the instruction.

For **bit-oriented** instructions, 'b' represents a bit field designator which selects the number of the bit affected by the operation, while 'f' represents the number of the file in which the bit is located.

For **literal and control** operations, 'k' represents an eight or eleven bit constant or literal value.

TABLE 9-1 OPCODE FIELD DESCRIPTIONS

Field	Description
f	Register file address (0x00 to 0x7F)
W	Working register (accumulator)
b	Bit address within an 8-bit file register
k	Literal field, constant data or label
x	Don't care location (= 0 or 1) The assembler will generate code with x = 0. It is the recommended form of use for compatibility with all Microchip software tools.
d	Destination select; d = 0: store result in W, d = 1: store result in file register f. Default is d = 1
label	Label name
TOS	Top of Stack
PC	Program Counter
PCLATH	Program Counter High Latch
GIE	Global Interrupt Enable bit
WDT	Watchdog Timer/Counter
$\overline{TO}$	Time-out bit
$\overline{PD}$	Power-down bit
dest	Destination either the W register or the specified register file location
[ ]	Options
( )	Contents
→	Assigned to
< >	Register bit field
∈	In the set of
italics	User defined term (font is courier)

The instruction set is highly orthogonal and is grouped into three basic categories:

- **Byte-oriented** operations
- **Bit-oriented** operations
- **Literal and control** operations

All instructions are executed within one single instruction cycle, unless a conditional test is true or the program counter is changed as a result of an instruction. In this case, the execution takes two instruction cycles with the second cycle executed as a NOP. One instruction cycle consists of four oscillator periods. Thus, for an oscillator frequency of 4 MHz, the normal instruction execution time is 1 µs. If a conditional test is true or the program counter is changed as a result of an instruction, the instruction execution time is 2 µs.

Table 9-2 lists the instructions recognized by the MPASM assembler.

Figure 9-1 shows the general formats that the instructions can have.

> **Note:** To maintain upward compatibility with future PIC16CXX products, do not use the `OPTION` and `TRIS` instructions.

All examples use the following format to represent a hexadecimal number:

0xhh

where h signifies a hexadecimal digit.

FIGURE 9-1: GENERAL FORMAT FOR INSTRUCTIONS

Byte-oriented file register operations

13 … 8	7	6 … 0
OPCODE	d	f (FILE #)

d = 0 for destination W
d = 1 for destination f
f = 7-bit file register address

Bit-oriented file register operations

13 … 10	9 … 7	6 … 0
OPCODE	b (BIT #)	f (FILE #)

b = 3-bit bit address
f = 7-bit file register address

Literal and control operations

General

13 … 8	7 … 0
OPCODE	k (literal)

k = 8-bit immediate value

`CALL` and `GOTO` instructions only

13 … 11	10 … 0
OPCODE	k (literal)

k = 11-bit immediate value

TABLE 9-2 PIC16FXX INSTRUCTION SET

Mnemonic, Operands		Description	Cycles	14-Bit Opcode MSb			LSb	Status Affected	Notes
BYTE-ORIENTED FILE REGISTER OPERATIONS									
ADDWF	**f, d**	Add W and f	1	00	0111	dfff	ffff	C,DC,Z	1,2
ANDWF	**f, d**	AND W with f	1	00	0101	dfff	ffff	Z	1,2
CLRF	**f**	Clear f	1	00	0001	lfff	ffff	Z	2
CLRW	**-**	Clear W	1	00	0001	0xxx	xxxx	Z	
COMF	**f, d**	Complement f	1	00	1001	dfff	ffff	Z	1,2
DECF	**f, d**	Decrement f	1	00	0011	dfff	ffff	Z	1,2
DECFSZ	**f, d**	Decrement f, Skip if 0	1(2)	00	1011	dfff	ffff		1,2,3
INCF	**f, d**	Increment f	1	00	1010	dfff	ffff	Z	1,2
INCFSZ	**f, d**	Increment f, Skip if 0	1(2)	00	1111	dfff	ffff		1,2,3
IORWF	**f, d**	Inclusive OR W with f	1	00	0100	dfff	ffff	Z	1,2
MOVF	**f, d**	Move f	1	00	1000	dfff	ffff	Z	1,2
MOVWF	**f**	Move W to f	1	00	0000	lfff	ffff		
NOP	**-**	No Operation	1	00	0000	0xx0	0000		
RLF	**f, d**	Rotate Left f through Carry	1	00	1101	dfff	ffff	C	1,2
RRF	**f, d**	Rotate Right f through Carry	1	00	1100	dfff	ffff	C	1,2
SUBWF	**f, d**	Subtract W from f	1	00	0010	dfff	ffff	C,DC,Z	1,2
SWAPF	**f, d**	Swap nibbles in f	1	00	1110	dfff	ffff		1,2
XORWF	**f, d**	Exclusive OR W with f	1	00	0110	dfff	ffff	Z	1,2
BIT-ORIENTED FILE REGISTER OPERATIONS									
BCF	**f, b**	Bit Clear f	1	01	00bb	bfff	ffff		1,2
BSF	**f, b**	Bit Set f	1	01	01bb	bfff	ffff		1,2
BTFSC	**f, b**	Bit Test f, Skip if Clear	1 (2)	01	10bb	bfff	ffff		3
BTFSS	**f, b**	Bit Test f, Skip if Set	1 (2)	01	11bb	bfff	ffff		3
LITERAL AND CONTROL OPERATIONS									
ADDLW	**k**	Add literal and W	1	11	111x	kkkk	kkkk	C,DC,Z	
ANDLW	**k**	AND literal with W	1	11	1001	kkkk	kkkk	Z	
CALL	**k**	Call subroutine	2	10	0kkk	kkkk	kkkk		
CLRWDT	**-**	Clear Watchdog Timer	1	00	0000	0110	0100	$\overline{TO}$,$\overline{PD}$	
GOTO	**k**	Go to address	2	10	1kkk	kkkk	kkkk		
IORLW	**k**	Inclusive OR literal with W	1	11	1000	kkkk	kkkk	Z	
MOVLW	**k**	Move literal to W	1	11	00xx	kkkk	kkkk		
RETFIE	**-**	Return from interrupt	2	00	0000	0000	1001		
RETLW	**k**	Return with literal in W	2	11	01xx	kkkk	kkkk		
RETURN	**-**	Return from Subroutine	2	00	0000	0000	1000		
SLEEP	**-**	Go into standby mode	1	00	0000	0110	0011	$\overline{TO}$,$\overline{PD}$	
SUBLW	**k**	Subtract W from literal	1	11	110x	kkkk	kkkk	C,DC,Z	
XORLW	**k**	Exclusive OR literal with W	1	11	1010	kkkk	kkkk	Z	

Note 1: When an I/O register is modified as a function of itself (e.g., `MOVF PORTB, 1`), the value used will be that value present on the pins themselves. For example, if the data latch is ’1’ for a pin configured as input and is driven low by an external device, the data will be written back with a ’0’.

2: If this instruction is executed on the TMR0 register (and, where applicable, d = 1), the prescaler will be cleared if assigned to the Timer0 Module.

3: If Program Counter (PC) is modified or a conditional test is true, the instruction requires two cycles. The second cycle is executed as a NOP.

© 1998 Microchip Technology Inc.

9.1 Instruction Descriptions

ADDLW — Add Literal and W

Syntax:	[*label*] ADDLW k
Operands:	$0 \le k \le 255$
Operation:	(W) + k → (W)
Status Affected:	C, DC, Z
Encoding:	11 | 111x | kkkk | kkkk
Description:	The contents of the W register are added to the eight bit literal 'k' and the result is placed in the W register.
Words:	1
Cycles:	1

Q Cycle Activity:

Q1	Q2	Q3	Q4
Decode	Read literal 'k'	Process data	Write to W

Example: `ADDLW 0x15`

Before Instruction
W = 0x10
After Instruction
W = 0x25

ANDLW — AND Literal with W

Syntax:	[*label*] ANDLW k
Operands:	$0 \le k \le 255$
Operation:	(W) .AND. (k) → (W)
Status Affected:	Z
Encoding:	11 | 1001 | kkkk | kkkk
Description:	The contents of W register are AND'ed with the eight bit literal 'k'. The result is placed in the W register.
Words:	1
Cycles:	1

Q Cycle Activity:

Q1	Q2	Q3	Q4
Decode	Read literal "k"	Process data	Write to W

Example `ANDLW 0x5F`

Before Instruction
W = 0xA3
After Instruction
W = 0x03

ADDWF — Add W and f

Syntax:	[*label*] ADDWF f,d
Operands:	$0 \le f \le 127$ $d \in [0,1]$
Operation:	(W) + (f) → (destination)
Status Affected:	C, DC, Z
Encoding:	00 | 0111 | dfff | ffff
Description:	Add the contents of the W register with register 'f'. If 'd' is 0 the result is stored in the W register. If 'd' is 1 the result is stored back in register 'f'.
Words:	1
Cycles:	1

Q Cycle Activity:

Q1	Q2	Q3	Q4
Decode	Read register 'f'	Process data	Write to destination

Example `ADDWF FSR, 0`

Before Instruction
W = 0x17
FSR = 0xC2
After Instruction
W = 0xD9
FSR = 0xC2

ANDWF — AND W with f

Syntax:	[*label*] ANDWF f,d
Operands:	$0 \le f \le 127$ $d \in [0,1]$
Operation:	(W) .AND. (f) → (destination)
Status Affected:	Z
Encoding:	00 | 0101 | dfff | ffff
Description:	AND the W register with register 'f'. If 'd' is 0 the result is stored in the W register. If 'd' is 1 the result is stored back in register 'f'.
Words:	1
Cycles:	1

Q Cycle Activity:

Q1	Q2	Q3	Q4
Decode	Read register 'f'	Process data	Write to destination

Example `ANDWF FSR, 1`

Before Instruction
W = 0x17
FSR = 0xC2
After Instruction
W = 0x17
FSR = 0x02

© 1998 Microchip Technology Inc.

BCF — Bit Clear f

Syntax: [*label*] BCF f,b

Operands: $0 \le f \le 127$
$0 \le b \le 7$

Operation: $0 \rightarrow$ (f<b>)

Status Affected: None

Encoding:

01	00bb	bfff	ffff

Description: Bit 'b' in register 'f' is cleared.

Words: 1

Cycles: 1

Q Cycle Activity:

Q1	Q2	Q3	Q4
Decode	Read register 'f'	Process data	Write register 'f'

Example

```
BCF     FLAG_REG, 7
```

Before Instruction
FLAG_REG = 0xC7
After Instruction
FLAG_REG = 0x47

BSF — Bit Set f

Syntax: [*label*] BSF f,b

Operands: $0 \le f \le 127$
$0 \le b \le 7$

Operation: $1 \rightarrow$ (f<b>)

Status Affected: None

Encoding:

01	01bb	bfff	ffff

Description: Bit 'b' in register 'f' is set.

Words: 1

Cycles: 1

Q Cycle Activity:

Q1	Q2	Q3	Q4
Decode	Read register 'f'	Process data	Write register 'f'

Example

```
BSF     FLAG_REG,   7
```

Before Instruction
FLAG_REG = 0x0A
After Instruction
FLAG_REG = 0x8A

BTFSC — Bit Test, Skip if Clear

Syntax: [*label*] BTFSC f,b

Operands: $0 \le f \le 127$
$0 \le b \le 7$

Operation: skip if (f<b>) = 0

Status Affected: None

Encoding:

01	10bb	bfff	ffff

Description: If bit 'b' in register 'f' is '1' then the next instruction is executed.
If bit 'b', in register 'f', is '0' then the next instruction is discarded, and a NOP is executed instead, making this a 2TCY instruction.

Words: 1

Cycles: 1(2)

Q Cycle Activity:

Q1	Q2	Q3	Q4
Decode	Read register 'f'	Process data	No-Operation

If Skip: (2nd Cycle)

Q1	Q2	Q3	Q4
No-Operation	No-Operation	No-Operation	No-Operation

Example

```
HERE    BTFSC   FLAG,1
FALSE   GOTO    PROCESS_CODE
TRUE    •
        •
        •
```

Before Instruction
PC = address HERE
After Instruction
if FLAG<1> = 0,
PC = address TRUE
if FLAG<1>=1,
PC = address FALSE

© 1998 Microchip Technology Inc.

BTFSS — Bit Test f, Skip if Set

Syntax:	[*label*] BTFSS f,b
Operands:	$0 \le f \le 127$ $0 \le b < 7$
Operation:	skip if (f<b>) = 1
Status Affected:	None
Encoding:	01 | 11bb | bfff | ffff
Description:	If bit 'b' in register 'f' is '0' then the next instruction is executed. If bit 'b' is '1', then the next instruction is discarded and a NOP is executed instead, making this a 2TCY instruction.
Words:	1
Cycles:	1(2)

Q Cycle Activity:

Q1	Q2	Q3	Q4
Decode	Read register 'f'	Process data	No-Operation

If Skip: (2nd Cycle)

Q1	Q2	Q3	Q4
No-Operation	No-Operation	No-Operation	No-Operation

Example

```
HERE    BTFSC   FLAG,1
FALSE   GOTO    PROCESS_CODE
TRUE    •
        •
        •
```

Before Instruction
PC = address HERE
After Instruction
if FLAG<1> = 0,
PC = address FALSE
if FLAG<1> = 1,
PC = address TRUE

CALL — Call Subroutine

Syntax:	[*label*] CALL k
Operands:	$0 \le k \le 2047$
Operation:	(PC)+ 1→ TOS, k → PC<10:0>, (PCLATH<4:3>) → PC<12:11>
Status Affected:	None
Encoding:	10 | 0kkk | kkkk | kkkk
Description:	Call Subroutine. First, return address (PC+1) is pushed onto the stack. The eleven bit immediate address is loaded into PC bits <10:0>. The upper bits of the PC are loaded from PCLATH. CALL is a two cycle instruction.
Words:	1
Cycles:	2

Q Cycle Activity:

	Q1	Q2	Q3	Q4
1st Cycle	Decode	Read literal 'k', Push PC to Stack	Process data	Write to PC
2nd Cycle	No-Operation	No-Operation	No-Operation	No-Operation

Example

```
HERE    CALL    THERE
```

Before Instruction
PC = Address HERE
After Instruction
PC = Address THERE
TOS = Address HERE+1

CLRF — Clear f

Syntax: [*label*] CLRF f

Operands: $0 \le f \le 127$

Operation: 00h → (f)
1 → Z

Status Affected: Z

Encoding:

00	0001	1fff	ffff

Description: The contents of register 'f' are cleared and the Z bit is set.

Words: 1

Cycles: 1

Q Cycle Activity:

Q1	Q2	Q3	Q4
Decode	Read register 'f'	Process data	Write register 'f'

Example

```
CLRF    FLAG_REG
```

Before Instruction
FLAG_REG = 0x5A
After Instruction
FLAG_REG = 0x00
Z = 1

CLRW — Clear W

Syntax: [*label*] CLRW

Operands: None

Operation: 00h → (W)
1 → Z

Status Affected: Z

Encoding:

00	0001	0xxx	xxxx

Description: W register is cleared. Zero bit (Z) is set.

Words: 1

Cycles: 1

Q Cycle Activity:

Q1	Q2	Q3	Q4
Decode	No-Operation	Process data	Write to W

Example

```
CLRW
```

Before Instruction
W = 0x5A
After Instruction
W = 0x00
Z = 1

CLRWDT — Clear Watchdog Timer

Syntax: [*label*] CLRWDT

Operands: None

Operation: 00h → WDT
0 → WDT prescaler,
1 → $\overline{TO}$
1 → $\overline{PD}$

Status Affected: $\overline{TO}$, $\overline{PD}$

Encoding:

00	0000	0110	0100

Description: CLRWDT instruction resets the Watchdog Timer. It also resets the prescaler of the WDT. Status bits $\overline{TO}$ and $\overline{PD}$ are set.

Words: 1

Cycles: 1

Q Cycle Activity:

Q1	Q2	Q3	Q4
Decode	No-Operation	Process data	Clear WDT Counter

Example

```
CLRWDT
```

Before Instruction
WDT counter = ?
After Instruction
WDT counter = 0x00
WDT prescaler = 0
$\overline{TO}$ = 1
$\overline{PD}$ = 1

© 1998 Microchip Technology Inc.

COMF — Complement f

Syntax: [*label*] COMF f,d

Operands: $0 \le f \le 127$
$d \in [0,1]$

Operation: $(\bar{f}) \rightarrow$ (destination)

Status Affected: Z

Encoding:

00	1001	dfff	ffff

Description: The contents of register 'f' are complemented. If 'd' is 0 the result is stored in W. If 'd' is 1 the result is stored back in register 'f'.

Words: 1

Cycles: 1

Q Cycle Activity:

Q1	Q2	Q3	Q4
Decode	Read register 'f'	Process data	Write to destination

Example

```
COMF        REG1,0
```

Before Instruction
REG1 = 0x13
After Instruction
REG1 = 0x13
W = 0xEC

DECF — Decrement f

Syntax: [*label*] DECF f,d

Operands: $0 \le f \le 127$
$d \in [0,1]$

Operation: (f) - 1 $\rightarrow$ (destination)

Status Affected: Z

Encoding:

00	0011	dfff	ffff

Description: Decrement register 'f'. If 'd' is 0 the result is stored in the W register. If 'd' is 1 the result is stored back in register 'f'.

Words: 1

Cycles: 1

Q Cycle Activity:

Q1	Q2	Q3	Q4
Decode	Read register 'f'	Process data	Write to destination

Example

```
DECF    CNT, 1
```

Before Instruction
CNT = 0x01
Z = 0
After Instruction
CNT = 0x00
Z = 1

DECFSZ — Decrement f, Skip if 0

Syntax: [*label*] DECFSZ f,d

Operands: $0 \le f \le 127$
$d \in [0,1]$

Operation: (f) - 1 $\rightarrow$ (destination);
skip if result = 0

Status Affected: None

Encoding:

00	1011	dfff	ffff

Description: The contents of register 'f' are decremented. If 'd' is 0 the result is placed in the W register. If 'd' is 1 the result is placed back in register 'f'.
If the result is 1, the next instruction, is executed. If the result is 0, then a NOP is executed instead making it a 2TCY instruction.

Words: 1

Cycles: 1(2)

Q Cycle Activity:

Q1	Q2	Q3	Q4
Decode	Read register 'f'	Process data	Write to destination

If Skip: (2nd Cycle)

Q1	Q2	Q3	Q4
No-Operation	No-Operation	No-Operation	No-Operation

Example

```
HERE      DECFSZ    CNT, 1
          GOTO      LOOP
CONTINUE  •
          •
          •
```

Before Instruction
PC = address HERE
After Instruction
CNT = CNT - 1
if CNT = 0,
PC = address CONTINUE
if CNT ≠ 0,
PC = address HERE+1

GOTO — Unconditional Branch

Syntax: [*label*] GOTO k

Operands: $0 \le k \le 2047$

Operation: k → PC<10:0>
PCLATH<4:3> → PC<12:11>

Status Affected: None

Encoding:

10	1kkk	kkkk	kkkk

Description: GOTO is an unconditional branch. The eleven bit immediate value is loaded into PC bits <10:0>. The upper bits of PC are loaded from PCLATH<4:3>. GOTO is a two cycle instruction.

Words: 1

Cycles: 2

Q Cycle Activity:

	Q1	Q2	Q3	Q4
1st Cycle	Decode	Read literal 'k'	Process data	Write to PC
2nd Cycle	No-Operation	No-Operation	No-Operation	No-Operation

Example

```
GOTO THERE
```

After Instruction
PC = Address THERE

INCF — Increment f

Syntax: [*label*] INCF f,d

Operands: $0 \le f \le 127$
$d \in [0,1]$

Operation: (f) + 1 → (destination)

Status Affected: Z

Encoding:

00	1010	dfff	ffff

Description: The contents of register 'f' are incremented. If 'd' is 0 the result is placed in the W register. If 'd' is 1 the result is placed back in register 'f'.

Words: 1

Cycles: 1

Q Cycle Activity:

Q1	Q2	Q3	Q4
Decode	Read register 'f'	Process data	Write to destination

Example

```
INCF    CNT, 1
```

Before Instruction
CNT = 0xFF
Z = 0
After Instruction
CNT = 0x00
Z = 1

© 1998 Microchip Technology Inc.

INCFSZ — Increment f, Skip if 0

Syntax: [*label*] INCFSZ f,d

Operands: $0 \le f \le 127$
$d \in [0,1]$

Operation: (f) + 1 → (destination), skip if result = 0

Status Affected: None

Encoding:

00	1111	dfff	ffff

Description: The contents of register 'f' are incremented. If 'd' is 0 the result is placed in the W register. If 'd' is 1 the result is placed back in register 'f'.
If the result is 1, the next instruction is executed. If the result is 0, a NOP is executed instead making it a 2TCY instruction.

Words: 1

Cycles: 1(2)

Q Cycle Activity:

Q1	Q2	Q3	Q4
Decode	Read register 'f'	Process data	Write to destination

If Skip: (2nd Cycle)

Q1	Q2	Q3	Q4
No-Operation	No-Operation	No-Operation	No-Operation

Example

```
HERE     INCFSZ     CNT, 1
         GOTO       LOOP
CONTINUE •
         •
         •
```

Before Instruction
PC = address HERE
After Instruction
CNT = CNT + 1
if CNT= 0,
PC = address CONTINUE
if CNT≠ 0,
PC = address HERE +1

IORLW — Inclusive OR Literal with W

Syntax: [*label*] IORLW k

Operands: $0 \le k \le 255$

Operation: (W) .OR. k → (W)

Status Affected: Z

Encoding:

11	1000	kkkk	kkkk

Description: The contents of the W register is OR'ed with the eight bit literal 'k'. The result is placed in the W register.

Words: 1

Cycles: 1

Q Cycle Activity:

Q1	Q2	Q3	Q4
Decode	Read literal 'k'	Process data	Write to W

Example

```
IORLW   0x35
```

Before Instruction
W = 0x9A
After Instruction
W = 0xBF
Z = 1

IORWF — Inclusive OR W with f

Syntax: [*label*] IORWF f,d

Operands: $0 \le f \le 127$
$d \in [0,1]$

Operation: (W) .OR. (f) → (destination)

Status Affected: $\overline{Z}$

Encoding:

00	0100	dfff	ffff

Description: Inclusive OR the W register with register 'f'. If 'd' is 0 the result is placed in the W register. If 'd' is 1 the result is placed back in register 'f'.

Words: 1

Cycles: 1

Q Cycle Activity:

Q1	Q2	Q3	Q4
Decode	Read register 'f'	Process data	Write to destination

Example

```
IORWF          RESULT, 0
```

Before Instruction
RESULT = 0x13
W = 0x91

After Instruction
RESULT = 0x13
W = 0x93
Z = 1

MOVF — Move f

Syntax: [*label*] MOVF f,d

Operands: $0 \le f \le 127$
$d \in [0,1]$

Operation: (f) → (destination)

Status Affected: Z

Encoding:

00	1000	dfff	ffff

Description: The contents of register f is moved to a destination dependant upon the status of d. If d = 0, destination is W register. If d = 1, the destination is file register f itself. d = 1 is useful to test a file register since status flag Z is affected.

Words: 1

Cycles: 1

Q Cycle Activity:

Q1	Q2	Q3	Q4
Decode	Read register 'f'	Process data	Write to destination

Example

```
MOVF     FSR, 0
```

After Instruction
W = value in FSR register
Z = 1

MOVLW — Move Literal to W

Syntax: [*label*] MOVLW k

Operands: $0 \le k \le 255$

Operation: k → (W)

Status Affected: None

Encoding:

11	00xx	kkkk	kkkk

Description: The eight bit literal 'k' is loaded into W register. The don't cares will assemble as 0's.

Words: 1

Cycles: 1

Q Cycle Activity:

Q1	Q2	Q3	Q4
Decode	Read literal 'k'	Process data	Write to W

Example

```
MOVLW    0x5A
```

After Instruction
W = 0x5A

MOVWF — Move W to f

Syntax: [*label*] MOVWF f

Operands: $0 \le f \le 127$

Operation: (W) → (f)

Status Affected: None

Encoding:

00	0000	1fff	ffff

Description: Move data from W register to register 'f'.

Words: 1

Cycles: 1

Q Cycle Activity:

Q1	Q2	Q3	Q4
Decode	Read register 'f'	Process data	Write register 'f'

Example

```
MOVWF    OPTION_REG
```

Before Instruction
OPTION = 0xFF
W = 0x4F

After Instruction
OPTION = 0x4F
W = 0x4F

© 1998 Microchip Technology Inc.

NOP	No Operation
Syntax:	[*label*] NOP
Operands:	None
Operation:	No operation
Status Affected:	None
Encoding:	00 | 0000 | 0xx0 | 0000
Description:	No operation.
Words:	1
Cycles:	1

Q Cycle Activity:

Q1	Q2	Q3	Q4
Decode	No-Operation	No-Operation	No-Operation

Example `NOP`

OPTION	Load Option Register
Syntax:	[*label*] OPTION
Operands:	None
Operation:	(W) → OPTION
Status Affected:	None
Encoding:	00 | 0000 | 0110 | 0010
Description:	The contents of the W register are loaded in the OPTION register. This instruction is supported for code compatibility with PIC16C5X products. Since OPTION is a readable/writable register, the user can directly address it.
Words:	1
Cycles:	1
Example	**To maintain upward compatibility with future PIC16CXX products, do not use this instruction.**

RETFIE	Return from Interrupt
Syntax:	[*label*] RETFIE
Operands:	None
Operation:	TOS → PC, 1 → GIE
Status Affected:	None
Encoding:	00 | 0000 | 0000 | 1001
Description:	Return from Interrupt. Stack is POPed and Top of Stack (TOS) is loaded in the PC. Interrupts are enabled by setting Global Interrupt Enable bit, GIE (INTCON<7>). This is a two cycle instruction.
Words:	1
Cycles:	2

Q Cycle Activity:

	Q1	Q2	Q3	Q4
1st Cycle	Decode	No-Operation	Set the GIE bit	Pop from the Stack
2nd Cycle	No-Operation	No-Operation	No-Operation	No-Operation

Example `RETFIE`

After Interrupt
PC = TOS
GIE = 1

RETLW — Return with Literal in W

Syntax: [*label*] RETLW k

Operands: $0 \le k \le 255$

Operation: k → (W);
TOS → PC

Status Affected: None

Encoding:

11	01xx	kkkk	kkkk

Description: The W register is loaded with the eight bit literal 'k'. The program counter is loaded from the top of the stack (the return address). This is a two cycle instruction.

Words: 1

Cycles: 2

Q Cycle Activity:

	Q1	Q2	Q3	Q4
1st Cycle	Decode	Read literal 'k'	No-Operation	Write to W, Pop from the Stack
2nd Cycle	No-Operation	No-Operation	No-Operation	No-Operation

Example

```
CALL TABLE  ;W contains table
            ;offset value
•            ;W now has table value
•
•
TABLE ADDWF PC   ;W = offset
      RETLW k1   ;Begin table
      RETLW k2   ;
•
•
•
      RETLW kn   ; End of table
```

Before Instruction
W = 0x07

After Instruction
W = value of k8

RETURN — Return from Subroutine

Syntax: [*label*] RETURN

Operands: None

Operation: TOS → PC

Status Affected: None

Encoding:

00	0000	0000	1000

Description: Return from subroutine. The stack is POPed and the top of the stack (TOS) is loaded into the program counter. This is a two cycle instruction.

Words: 1

Cycles: 2

Q Cycle Activity:

	Q1	Q2	Q3	Q4
1st Cycle	Decode	No-Operation	No-Operation	Pop from the Stack
2nd Cycle	No-Operation	No-Operation	No-Operation	No-Operation

Example

```
RETURN
```

After Interrupt
PC = TOS

© 1998 Microchip Technology Inc.

RLF — Rotate Left f through Carry

Syntax:	[*label*] RLF f,d
Operands:	$0 \le f \le 127$ $d \in [0,1]$
Operation:	See description below
Status Affected:	C
Encoding:	00 | 1101 | dfff | ffff
Description:	The contents of register 'f' are rotated one bit to the left through the Carry Flag. If 'd' is 0 the result is placed in the W register. If 'd' is 1 the result is stored back in register 'f'.

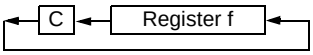

Words:	1
Cycles:	1

Q Cycle Activity:

Q1	Q2	Q3	Q4
Decode	Read register 'f'	Process data	Write to destination

Example

```
RLF        REG1,0
```

Before Instruction
```
REG1   =   1110 0110
C      =   0
```
After Instruction
```
REG1   =   1110 0110
W      =   1100 1100
C      =   1
```

RRF — Rotate Right f through Carry

Syntax:	[*label*] RRF f,d
Operands:	$0 \le f \le 127$ $d \in [0,1]$
Operation:	See description below
Status Affected:	C
Encoding:	00 | 1100 | dfff | ffff
Description:	The contents of register 'f' are rotated one bit to the right through the Carry Flag. If 'd' is 0 the result is placed in the W register. If 'd' is 1 the result is placed back in register 'f'.

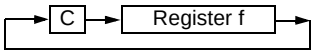

Words:	1
Cycles:	1

Q Cycle Activity:

Q1	Q2	Q3	Q4
Decode	Read register 'f'	Process data	Write to destination

Example

```
RRF        REG1,0
```

Before Instruction
```
REG1   =   1110 0110
C      =   0
```
After Instruction
```
REG1   =   1110 0110
W      =   0111 0011
C      =   0
```

SLEEP

Syntax: [*label*] SLEEP

Operands: None

Operation: 00h → WDT,
0 → WDT prescaler,
1 → $\overline{TO}$,
0 → $\overline{PD}$

Status Affected: $\overline{TO}$, $\overline{PD}$

Encoding:

00	0000	0110	0011

Description: The power-down status bit, $\overline{PD}$ is cleared. Time-out status bit, $\overline{TO}$ is set. Watchdog Timer and its prescaler are cleared.
The processor is put into SLEEP mode with the oscillator stopped. See Section 14.8 for more details.

Words: 1

Cycles: 1

Q Cycle Activity:

Q1	Q2	Q3	Q4
Decode	No-Operation	No-Operation	Go to Sleep

Example: SLEEP

SUBLW — Subtract W from Literal

Syntax: [*label*] SUBLW k

Operands: $0 \le k \le 255$

Operation: k - (W) → (W)

Status Affected: C, DC, Z

Encoding:

11	110x	kkkk	kkkk

Description: The W register is subtracted (2's complement method) from the eight bit literal 'k'. The result is placed in the W register.

Words: 1

Cycles: 1

Q Cycle Activity:

Q1	Q2	Q3	Q4
Decode	Read literal 'k'	Process data	Write to W

Example 1: SUBLW 0x02

Before Instruction
W = 1
C = ?
Z = ?

After Instruction
W = 1
C = 1; result is positive
Z = 0

Example 2: Before Instruction
W = 2
C = ?
Z = ?

After Instruction
W = 0
C = 1; result is zero
Z = 1

Example 3: Before Instruction
W = 3
C = ?
Z = ?

After Instruction
W = 0xFF
C = 0; result is negative
Z = 0

© 1998 Microchip Technology Inc.

SUBWF — Subtract W from f

Syntax: [*label*] SUBWF f,d

Operands: $0 \le f \le 127$
$d \in [0,1]$

Operation: (f) - (W) → (destination)

Status Affected: C, DC, Z

Encoding:

00	0010	dfff	ffff

Description: Subtract (2's complement method) W register from register 'f'. If 'd' is 0 the result is stored in the W register. If 'd' is 1 the result is stored back in register 'f'.

Words: 1

Cycles: 1

Q Cycle Activity:

Q1	Q2	Q3	Q4
Decode	Read register 'f'	Process data	Write to destination

Example 1: `SUBWF REG1,1`

Before Instruction

REG1 = 3
W = 2
C = ?
Z = ?

After Instruction

REG1 = 1
W = 2
C = 1; result is positive
Z = 0

Example 2: Before Instruction

REG1 = 2
W = 2
C = ?
Z = ?

After Instruction

REG1 = 0
W = 2
C = 1; result is zero
Z = 1

Example 3: Before Instruction

REG1 = 1
W = 2
C = ?
Z = ?

After Instruction

REG1 = 0xFF
W = 2
C = 0; result is negative
Z = 0

SWAPF — Swap Nibbles in f

Syntax: [*label*] SWAPF f,d

Operands: $0 \le f \le 127$
$d \in [0,1]$

Operation: (f<3:0>) → (destination<7:4>),
(f<7:4>) → (destination<3:0>)

Status Affected: None

Encoding:

00	1110	dfff	ffff

Description: The upper and lower nibbles of register 'f' are exchanged. If 'd' is 0 the result is placed in W register. If 'd' is 1 the result is placed in register 'f'.

Words: 1

Cycles: 1

Q Cycle Activity:

Q1	Q2	Q3	Q4
Decode	Read register 'f'	Process data	Write to destination

Example `SWAPF REG, 0`

Before Instruction

REG1 = 0xA5

After Instruction

REG1 = 0xA5
W = 0x5A

TRIS — Load TRIS Register

Syntax: [*label*] TRIS f

Operands: $5 \le f \le 7$

Operation: (W) → TRIS register f;

Status Affected: None

Encoding:

00	0000	0110	0fff

Description: The instruction is supported for code compatibility with the PIC16C5X products. Since TRIS registers are readable and writable, the user can directly address them.

Words: 1

Cycles: 1

Example

To maintain upward compatibility with future PIC16CXX products, do not use this instruction.

XORLW — Exclusive OR Literal with W

Syntax: [*label*] XORLW k

Operands: $0 \le k \le 255$

Operation: (W) .XOR. k → (W)

Status Affected: Z

Encoding:

11	1010	kkkk	kkkk

Description: The contents of the W register are XOR'ed with the eight bit literal 'k'. The result is placed in the W register.

Words: 1

Cycles: 1

Q Cycle Activity:

Q1	Q2	Q3	Q4
Decode	Read literal 'k'	Process data	Write to W

Example: `XORLW 0xAF`

Before Instruction

W = 0xB5

After Instruction

W = 0x1A

XORWF — Exclusive OR W with f

Syntax: [*label*] XORWF f,d

Operands: $0 \le f \le 127$
$d \in [0,1]$

Operation: (W) .XOR. (f) → (destination)

Status Affected: Z

Encoding:

00	0110	dfff	ffff

Description: Exclusive OR the contents of the W register with register 'f'. If 'd' is 0 the result is stored in the W register. If 'd' is 1 the result is stored back in register 'f'.

Words: 1

Cycles: 1

Q Cycle Activity:

Q1	Q2	Q3	Q4
Decode	Read register 'f'	Process data	Write to destination

Example `XORWF REG 1`

Before Instruction

REG = 0xAF
W = 0xB5

After Instruction

REG = 0x1A
W = 0xB5

© 1998 Microchip Technology Inc.

10.0 DEVELOPMENT SUPPORT

10.1 Development Tools

The PICmicro™ microcontrollers are supported with a full range of hardware and software development tools:

- PICMASTER®/PICMASTER CE Real-Time In-Circuit Emulator
- ICEPIC™ Low-Cost PIC16C5X and PIC16CXXX In-Circuit Emulator
- PRO MATE® II Universal Programmer
- PICSTART® Plus Entry-Level Prototype Programmer
- PICDEM-1 Low-Cost Demonstration Board
- PICDEM-2 Low-Cost Demonstration Board
- PICDEM-3 Low-Cost Demonstration Board
- MPASM Assembler
- MPLAB™ SIM Software Simulator
- MPLAB-C17 (C Compiler)
- Fuzzy Logic Development System (*fuzzy*TECH®–MP)

10.2 PICMASTER: High Performance Universal In-Circuit Emulator with MPLAB IDE

The PICMASTER Universal In-Circuit Emulator is intended to provide the product development engineer with a complete microcontroller design tool set for all microcontrollers in the PIC14C000, PIC12CXXX, PIC16C5X, PIC16CXXX and PIC17CXX families. PICMASTER is supplied with the MPLAB™ Integrated Development Environment (IDE), which allows editing, “make” and download, and source debugging from a single environment.

Interchangeable target probes allow the system to be easily reconfigured for emulation of different processors. The universal architecture of the PICMASTER allows expansion to support all new Microchip microcontrollers.

The PICMASTER Emulator System has been designed as a real-time emulation system with advanced features that are generally found on more expensive development tools. The PC compatible 386 (and higher) machine platform and Microsoft Windows® 3.x environment were chosen to best make these features available to you, the end user.

A CE compliant version of PICMASTER is available for European Union (EU) countries.

10.3 ICEPIC: Low-Cost PICmicro™ In-Circuit Emulator

ICEPIC is a low-cost in-circuit emulator solution for the Microchip PIC12CXXX, PIC16C5X and PIC16CXXX families of 8-bit OTP microcontrollers.

ICEPIC is designed to operate on PC-compatible machines ranging from 286-AT® through Pentium™ based machines under Windows 3.x environment. ICEPIC features real time, non-intrusive emulation.

10.4 PRO MATE II: Universal Programmer

The PRO MATE II Universal Programmer is a full-featured programmer capable of operating in stand-alone mode as well as PC-hosted mode. PRO MATE II is CE compliant.

The PRO MATE II has programmable V_{DD} and V_{PP} supplies which allows it to verify programmed memory at V_{DD} min and V_{DD} max for maximum reliability. It has an LCD display for displaying error messages, keys to enter commands and a modular detachable socket assembly to support various package types. In stand-alone mode the PRO MATE II can read, verify or program PIC12CXXX, PIC14C000, PIC16C5X, PIC16CXXX and PIC17CXX devices. It can also set configuration and code-protect bits in this mode.

10.5 PICSTART Plus Entry Level Development System

The PICSTART programmer is an easy-to-use, low-cost prototype programmer. It connects to the PC via one of the COM (RS-232) ports. MPLAB Integrated Development Environment software makes using the programmer simple and efficient. PICSTART Plus is not recommended for production programming.

PICSTART Plus supports all PIC12CXXX, PIC14C000, PIC16C5X, PIC16CXXX and PIC17CXX devices with up to 40 pins. Larger pin count devices such as the PIC16C923, PIC16C924 and PIC17C756 may be supported with an adapter socket. PICSTART Plus is CE compliant.

© 1998 Microchip Technology Inc.

10.6 PICDEM-1 Low-Cost PICmicro Demonstration Board

The PICDEM-1 is a simple board which demonstrates the capabilities of several of Microchip's microcontrollers. The microcontrollers supported are: PIC16C5X (PIC16C54 to PIC16C58A), PIC16C61, PIC16C62X, PIC16C71, PIC16C8X, PIC17C42, PIC17C43 and PIC17C44. All necessary hardware and software is included to run basic demo programs. The users can program the sample microcontrollers provided with the PICDEM-1 board, on a PRO MATE II or PICSTART-Plus programmer, and easily test firmware. The user can also connect the PICDEM-1 board to the PICMASTER emulator and download the firmware to the emulator for testing. Additional prototype area is available for the user to build some additional hardware and connect it to the microcontroller socket(s). Some of the features include an RS-232 interface, a potentiometer for simulated analog input, push-button switches and eight LEDs connected to PORTB.

10.7 PICDEM-2 Low-Cost PIC16CXX Demonstration Board

The PICDEM-2 is a simple demonstration board that supports the PIC16C62, PIC16C64, PIC16C65, PIC16C73 and PIC16C74 microcontrollers. All the necessary hardware and software is included to run the basic demonstration programs. The user can program the sample microcontrollers provided with the PICDEM-2 board, on a PRO MATE II programmer or PICSTART-Plus, and easily test firmware. The PICMASTER emulator may also be used with the PICDEM-2 board to test firmware. Additional prototype area has been provided to the user for adding additional hardware and connecting it to the microcontroller socket(s). Some of the features include a RS-232 interface, push-button switches, a potentiometer for simulated analog input, a Serial EEPROM to demonstrate usage of the I^2C bus and separate headers for connection to an LCD module and a keypad.

10.8 PICDEM-3 Low-Cost PIC16CXXX Demonstration Board

The PICDEM-3 is a simple demonstration board that supports the PIC16C923 and PIC16C924 in the PLCC package. It will also support future 44-pin PLCC microcontrollers with a LCD Module. All the necessary hardware and software is included to run the basic demonstration programs. The user can program the sample microcontrollers provided with the PICDEM-3 board, on a PRO MATE II programmer or PICSTART Plus with an adapter socket, and easily test firmware. The PICMASTER emulator may also be used with the PICDEM-3 board to test firmware. Additional prototype area has been provided to the user for adding hardware and connecting it to the microcontroller socket(s). Some of the features include an RS-232 interface, push-button switches, a potentiometer for simulated analog input, a thermistor and separate headers for connection to an external LCD module and a keypad. Also provided on the PICDEM-3 board is an LCD panel, with 4 commons and 12 segments, that is capable of displaying time, temperature and day of the week. The PICDEM-3 provides an additional RS-232 interface and Windows 3.1 software for showing the demultiplexed LCD signals on a PC. A simple serial interface allows the user to construct a hardware demultiplexer for the LCD signals.

10.9 MPLAB™ Integrated Development Environment Software

The MPLAB IDE Software brings an ease of software development previously unseen in the 8-bit microcontroller market. MPLAB is a windows based application which contains:

- A full featured editor
- Three operating modes
  - editor
  - emulator
  - simulator
- A project manager
- Customizable tool bar and key mapping
- A status bar with project information
- Extensive on-line help

MPLAB allows you to:

- Edit your source files (either assembly or 'C')
- One touch assemble (or compile) and download to PICmicro tools (automatically updates all project information)
- Debug using:
  - source files
  - absolute listing file
- Transfer data dynamically via DDE (soon to be replaced by OLE)
- Run up to four emulators on the same PC

The ability to use MPLAB with Microchip's simulator allows a consistent platform and the ability to easily switch from the low cost simulator to the full featured emulator with minimal retraining due to development tools.

10.10 Assembler (MPASM)

The MPASM Universal Macro Assembler is a PC-hosted symbolic assembler. It supports all microcontroller series including the PIC12C5XX, PIC14000, PIC16C5X, PIC16CXXX, and PIC17CXX families.

MPASM offers full featured Macro capabilities, conditional assembly, and several source and listing formats. It generates various object code formats to support Microchip's development tools as well as third party programmers.

MPASM allows full symbolic debugging from PICMASTER, Microchip's Universal Emulator System.

© 1998 Microchip Technology Inc.

MPASM has the following features to assist in developing software for specific use applications.

- Provides translation of Assembler source code to object code for all Microchip microcontrollers.
- Macro assembly capability.
- Produces all the files (Object, Listing, Symbol, and special) required for symbolic debug with Microchip's emulator systems.
- Supports Hex (default), Decimal and Octal source and listing formats.

MPASM provides a rich directive language to support programming of the PICmicro. Directives are helpful in making the development of your assemble source code shorter and more maintainable.

10.11 Software Simulator (MPLAB-SIM)

The MPLAB-SIM Software Simulator allows code development in a PC host environment. It allows the user to simulate the PICmicro series microcontrollers on an instruction level. On any given instruction, the user may examine or modify any of the data areas or provide external stimulus to any of the pins. The input/output radix can be set by the user and the execution can be performed in; single step, execute until break, or in a trace mode.

MPLAB-SIM fully supports symbolic debugging using MPLAB-C and MPASM. The Software Simulator offers the low cost flexibility to develop and debug code outside of the laboratory environment making it an excellent multi-project software development tool.

10.12 C Compiler (MPLAB-C17)

The MPLAB-C Code Development System is a complete 'C' compiler and integrated development environment for Microchip's PIC17CXXX family of microcontrollers. The compiler provides powerful integration capabilities and ease of use not found with other compilers.

For easier source level debugging, the compiler provides symbol information that is compatible with the MPLAB IDE memory display.

10.13 Fuzzy Logic Development System (*fuzzy*TECH-MP)

*fuzzy*TECH-MP fuzzy logic development tool is available in two versions - a low cost introductory version, MP Explorer, for designers to gain a comprehensive working knowledge of fuzzy logic system design; and a full-featured version, *fuzzy*TECH-MP, Edition for implementing more complex systems.

Both versions include Microchip's *fuzzy*LAB™ demonstration board for hands-on experience with fuzzy logic systems implementation.

10.14 MP-DriveWay™ – Application Code Generator

MP-DriveWay is an easy-to-use Windows-based Application Code Generator. With MP-DriveWay you can visually configure all the peripherals in a PICmicro device and, with a click of the mouse, generate all the initialization and many functional code modules in C language. The output is fully compatible with Microchip's MPLAB-C C compiler. The code produced is highly modular and allows easy integration of your own code. MP-DriveWay is intelligent enough to maintain your code through subsequent code generation.

10.15 SEEVAL® Evaluation and Programming System

The SEEVAL SEEPROM Designer's Kit supports all Microchip 2-wire and 3-wire Serial EEPROMs. The kit includes everything necessary to read, write, erase or program special features of any Microchip SEEPROM product including Smart Serials™ and secure serials. The Total Endurance™ Disk is included to aid in trade-off analysis and reliability calculations. The total kit can significantly reduce time-to-market and result in an optimized system.

10.16 KEELOQ® Evaluation and Programming Tools

KEELOQ evaluation and programming tools support Microchips HCS Secure Data Products. The HCS evaluation kit includes an LCD display to show changing codes, a decoder to decode transmissions, and a programming interface to program test transmitters.

TABLE 10-1: DEVELOPMENT TOOLS FROM MICROCHIP

		PIC12C5XX	PIC14000	PIC16C5X	PIC16CXXX	PIC16C6X	PIC16C7XX	PIC16C8X	PIC16C9XX	PIC17C4X	PIC17C75X	24CXX 25CXX 93CXX	HCS200 HCS300 HCS301
Emulator Products	PICMASTER®/ PICMASTER-CE In-Circuit Emulator	✓	✓	✓	✓	✓	✓	✓	✓	✓	✓		
	ICEPIC™ Low-Cost In-Circuit Emulator	✓		✓	✓	✓	✓	✓	✓				
Software Tools	MPLAB™ Integrated Development Environment	✓	✓	✓	✓	✓	✓	✓	✓	✓	✓		
	MPLAB™ C17 Compiler									✓	✓		
	*fuzzy*TECH®-MP Explorer/Edition Fuzzy Logic Dev. Tool	✓	✓	✓	✓	✓	✓	✓	✓	✓			
	MP-DriveWay™ Applications Code Generator			✓	✓	✓	✓	✓	✓	✓			
	Total Endurance™ Software Model											✓	
Programmers	PICSTART®Plus Low-Cost Universal Dev. Kit	✓	✓	✓	✓	✓	✓	✓	✓	✓	✓		
	PRO MATE® II Universal Programmer	✓	✓	✓	✓	✓	✓	✓	✓	✓	✓	✓	✓
	KEELOQ® Programmer												✓
Demo Boards	SEEVAL® Designers Kit											✓	
	PICDEM-1			✓	✓			✓		✓			
	PICDEM-2					✓	✓						
	PICDEM-3								✓				
	KEELOQ® Evaluation Kit												✓

© 1998 Microchip Technology Inc.

11.0 ELECTRICAL CHARACTERISTICS FOR PIC16F83 AND PIC16F84

Absolute Maximum Ratings †

Ambient temperature under bias ..... -55°C to +125°C

Storage temperature ..... -65°C to +150°C

Voltage on V_{DD} with respect to V_{SS} ..... -0.3 to +7.5V

Voltage on $\overline{MCLR}$ with respect to V_{SS} (2) ..... -0.3 to +14V

Voltage on any pin with respect to V_{SS} (except V_{DD} and $\overline{MCLR}$) ..... -0.6V to (V_{DD} + 0.6V)

Total power dissipation (1) ..... 800 mW

Maximum current out of V_{SS} pin ..... 150 mA

Maximum current into V_{DD} pin ..... 100 mA

Input clamp current, I_{IK} (V_I < 0 or V_I > V_{DD}) ..... ± 20 mA

Output clamp current, I_{OK} (V_O < 0 or V_O > V_{DD}) ..... ± 20 mA

Maximum output current sunk by any I/O pin ..... 25 mA

Maximum output current sourced by any I/O pin ..... 20 mA

Maximum current sunk by PORTA ..... 80 mA

Maximum current sourced by PORTA ..... 50 mA

Maximum current sunk by PORTB ..... 150 mA

Maximum current sourced by PORTB ..... 100 mA

Note 1: Power dissipation is calculated as follows: $P_{dis} = V_{DD} \times \{I_{DD} - \sum I_{OH}\} + \sum \{(V_{DD}-V_{OH}) \times I_{OH}\} + \sum(V_{OL} \times I_{OL})$

Note 2: Voltage spikes below V_{SS} at the $\overline{MCLR}$ pin, inducing currents greater than 80 mA, may cause latch-up. Thus, a series resistor of 50-100Ω should be used when applying a “low” level to the $\overline{MCLR}$ pin rather than pulling this pin directly to V_{SS}.

† NOTICE: Stresses above those listed under “Absolute Maximum Ratings” may cause permanent damage to the device. This is a stress rating only and functional operation of the device at those or any other conditions above those indicated in the operation listings of this specification is not implied. Exposure to maximum rating conditions for extended periods may affect device reliability.

PRELIMINARY

TABLE 11-1 CROSS REFERENCE OF DEVICE SPECS FOR OSCILLATOR CONFIGURATIONS AND FREQUENCIES OF OPERATION (COMMERCIAL DEVICES)

OSC	PIC16F84-04 PIC16F83-04	PIC16F84-10 PIC16F83-10	PIC16LF84-04 PIC16LF83-04
RC	VDD: 4.0V to 6.0V IDD: 4.5 mA max. at 5.5V IPD: 14 µA max. at 4V WDT dis Freq: 4.0 MHz max.	VDD: 4.5V to 5.5V IDD: 1.8 mA typ. at 5.5V IPD: 1.0 µA typ. at 5.5V WDT dis Freq: 4..0 MHz max.	VDD: 2.0V to 6.0V IDD: 4.5 mA max. at 5.5V IPD: 7.0 µA max. at 2V WDT dis Freq: 2.0 MHz max.
XT	VDD: 4.0V to 6.0V IDD: 4.5 mA max. at 5.5V IPD: 14 µA max. at 4V WDT dis Freq: 4.0 MHz max.	VDD: 4.5V to 5.5V IDD: 1.8 mA typ. at 5.5V IPD: 1.0 µA typ. at 5.5V WDT dis Freq: 4.0 MHz max.	VDD: 2.0V to 6.0V IDD: 4.5 mA max. at 5.5V IPD: 7.0 µA max. at 2V WDT dis Freq: 2.0 MHz max.
HS	VDD: 4.5V to 5.5V IDD: 4.5 mA typ. at 5.5V IPD: 1.0 µA typ. at 4.5V WDT dis Freq: 4.0 MHz max.	VDD: 4.5V to 5.5V IDD: 10 mA max. at 5.5V typ. IPD: 1.0 µA typ. at 4.5V WDT dis Freq: 10 MHz max.	Do not use in HS mode
LP	VDD: 4.0V to 6.0V IDD: 48 µA typ. at 32 kHz, 2.0V IPD: 0.6 µA typ. at 3.0V WDT dis Freq: 200 kHz max.	Do not use in LP mode	VDD: 2.0V to 6.0V IDD: 45 µA max. at 32 kHz, 2.0V IPD: 7 µA max. at 2.0V WDT dis Freq: 200 kHz max.
The shaded sections indicate oscillator selections which are tested for functionality, but not for MIN/MAX specifications. It is recommended that the user select the device type that ensures the specifications required.			

PRELIMINARY

© 1998 Microchip Technology Inc.

11.1 DC CHARACTERISTICS: PIC16F84, PIC16F83 (Commercial, Industrial)

DC Characteristics Power Supply Pins			Standard Operating Conditions (unless otherwise stated) Operating temperature 0°C ≤ TA ≤ +70°C (commercial) -40°C ≤ TA ≤ +85°C (industrial)				
Parameter No.	**Sym**	**Characteristic**	**Min**	**Typ†**	**Max**	**Units**	**Conditions**
D001 D001A	VDD	Supply Voltage	4.0 4.5	— —	6.0 5.5	V V	XT, RC and LP osc configuration HS osc configuration
D002	VDR	RAM Data Retention Voltage(1)	1.5*	—	—	V	Device in SLEEP mode
D003	VPOR	VDD start voltage to ensure internal Power-on Reset signal	—	VSS	—	V	See section on Power-on Reset for details
D004	SVDD	VDD rise rate to ensure internal Power-on Reset signal	0.05*	—	—	V/ms	See section on Power-on Reset for details
	IDD	Supply Current(2)					RC and XT osc configuration(4)
D010			—	1.8	4.5	mA	FOSC = 4.0 MHz, VDD = 5.5V
D010A			—	7.3	10	mA	FOSC = 4.0 MHz, VDD = 5.5V (During Flash programming)
							HS osc configuration (PIC16F84-10)
D013			—	5	10	mA	FOSC = 10 MHz, VDD = 5.5V
D020	IPD	Power-down Current(3)	—	7.0	28	µA	VDD = 4.0V, WDT enabled, industrial
D021			—	1.0	14	µA	VDD = 4.0V, WDT disabled, commercial
D021A			—	1.0	16	µA	VDD = 4.0V, WDT disabled, industrial

* These parameters are characterized but not tested.

† Data in "Typ" column is at 5.0V, 25°C unless otherwise stated. These parameters are for design guidance only and are not tested.

Note 1: This is the limit to which VDD can be lowered in SLEEP mode without losing RAM data.

2: The supply current is mainly a function of the operating voltage and frequency. Other factors such as I/O pin loading and switching rate, oscillator type, internal code execution pattern, and temperature also have an impact on the current consumption.
The test conditions for all IDD measurements in active operation mode are:
OSC1=external square wave, from rail to rail; all I/O pins tristated, pulled to VDD, T0CKI = VDD, $\overline{\text{MCLR}}$ = VDD; WDT enabled/disabled as specified.

3: The power down current in SLEEP mode does not depend on the oscillator type. Power-down current is measured with the part in SLEEP mode, with all I/O pins in hi-impedance state and tied to VDD and VSS.

4: For RC osc configuration, current through Rext is not included. The current through the resistor can be estimated by the formula IR = VDD/2Rext (mA) with Rext in kOhm.

PRELIMINARY

11.2 DC CHARACTERISTICS: PIC16LF84, PIC16LF83 (Commercial, Industrial)

DC Characteristics Power Supply Pins			Standard Operating Conditions (unless otherwise stated) Operating temperature 0°C ≤ TA ≤ +70°C (commercial) -40°C ≤ TA ≤ +85°C (industrial)				
Parameter No.	**Sym**	**Characteristic**	**Min**	**Typ†**	**Max**	**Units**	**Conditions**
D001	VDD	Supply Voltage	2.0	—	6.0	V	XT, RC, and LP osc configuration
D002	VDR	RAM Data Retention Voltage(1)	1.5*	—	—	V	Device in SLEEP mode
D003	VPOR	VDD start voltage to ensure internal Power-on Reset signal	—	VSS	—	V	See section on Power-on Reset for details
D004	SVDD	VDD rise rate to ensure internal Power-on Reset signal	0.05*	—	—	V/ms	See section on Power-on Reset for details
	IDD	Supply Current(2)					RC and XT osc configuration(4)
D010			—	1	4	mA	FOSC = 2.0 MHz, VDD = 5.5V
D010A			—	7.3	10	mA	FOSC = 2.0 MHz, VDD = 5.5V (During Flash programming)
							LP osc configuration
D014			—	15	45	µA	FOSC = 32 kHz, VDD = 2.0V, WDT disabled
D020	IPD	Power-down Current(3)	—	3.0	16	µA	VDD = 2.0V, WDT enabled, industrial
D021			—	0.4	7.0	µA	VDD = 2.0V, WDT disabled, commercial
D021A			—	0.4	9.0	µA	VDD = 2.0V, WDT disabled, industrial

* These parameters are characterized but not tested.

† Data in "Typ" column is at 5.0V, 25°C unless otherwise stated. These parameters are for design guidance only and are not tested.

Note 1: This is the limit to which VDD can be lowered in SLEEP mode without losing RAM data.

2: The supply current is mainly a function of the operating voltage and frequency. Other factors such as I/O pin loading and switching rate, oscillator type, internal code execution pattern, and temperature also have an impact on the current consumption.
The test conditions for all IDD measurements in active operation mode are:
OSC1=external square wave, from rail to rail; all I/O pins tristated, pulled to VDD, T0CKI = VDD, $\overline{MCLR}$ = VDD; WDT enabled/disabled as specified.

3: The power down current in SLEEP mode does not depend on the oscillator type. Power-down current is measured with the part in SLEEP mode, with all I/O pins in hi-impedance state and tied to VDD and VSS.

4: For RC osc configuration, current through Rext is not included. The current through the resistor can be estimated by the formula IR = VDD/2Rext (mA) with Rext in kOhm.

PRELIMINARY

 © 1998 Microchip Technology Inc.

11.3 DC CHARACTERISTICS: PIC16F84, PIC16F83 (Commercial, Industrial) PIC16LF84, PIC16LF83 (Commercial, Industrial)

DC Characteristics **All Pins Except** **Power Supply Pins**			**Standard Operating Conditions (unless otherwise stated)** Operating temperature 0°C ≤ TA ≤ +70°C (commercial) -40°C ≤ TA ≤ +85°C (industrial) Operating voltage VDD range as described in DC spec Section 11.1 and Section 11.2.				
Parameter No.	**Sym**	**Characteristic**	**Min**	**Typ†**	**Max**	**Units**	**Conditions**
		Input Low Voltage					
	VIL	I/O ports					
D030		with TTL buffer	VSS	—	0.8	V	4.5 V ≤ VDD ≤ 5.5 V(4)
D030A			VSS	—	0.16VDD	V	entire range(4)
D031		with Schmitt Trigger buffer	VSS	—	0.2VDD	V	entire range
D032		$\overline{\text{MCLR}}$, RA4/T0CKI	Vss	—	0.2VDD	V	
D033		OSC1 (XT, HS and LP modes)(1)	Vss	—	0.3VDD	V	
D034		OSC1 (RC mode)	Vss	—	0.1VDD	V	
		Input High Voltage					
	VIH	I/O ports		—			
D040		with TTL buffer	2.4	—	VDD	V	4.5 V ≤ VDD ≤ 5.5V(4)
D040A			0.48VDD	—	VDD	V	entire range(4)
D041		with Schmitt Trigger buffer	0.45VDD	—	VDD		entire range
D042		$\overline{\text{MCLR}}$, RA4/T0CKI, OSC1 (RC mode)	0.85 VDD	—	VDD	V	
D043		OSC1 (XT, HS and LP modes)(1)	0.7 VDD	—	VDD	V	
D050	VHYS	Hysteresis of Schmitt Trigger inputs	TBD	—	—	V	
D070	IPURB	PORTB weak pull-up current	50*	250*	400*	μA	VDD = 5.0V, VPIN = VSS
		Input Leakage Current(2,3)					
D060	IIL	I/O ports	—	—	±1	μA	Vss ≤ VPIN ≤ VDD, Pin at hi-impedance
D061		$\overline{\text{MCLR}}$, RA4/T0CKI	—	—	±5	μA	Vss ≤ VPIN ≤ VDD
D063		OSC1	—	—	±5	μA	Vss ≤ VPIN ≤ VDD, XT, HS and LP osc configuration
		Output Low Voltage					
D080	VOL	I/O ports	—	—	0.6	V	IOL = 8.5 mA, VDD = 4.5V
D083		OSC2/CLKOUT	—	—	0.6	V	IOL = 1.6 mA, VDD = 4.5V
		Output High Voltage					
D090	VOH	I/O ports(3)	VDD-0.7	—	—	V	IOH = -3.0 mA, VDD = 4.5V
D092		OSC2/CLKOUT	VDD-0.7	—	—	V	IOH = -1.3 mA, VDD = 4.5V

* These parameters are characterized but not tested.

† Data in "Typ" column is at 5.0V, 25°C unless otherwise stated. These parameters are for design guidance only and are not tested.

Note 1: In RC oscillator configuration, the OSC1 pin is a Schmitt Trigger input. Do not drive the PIC16F8X with an external clock while the device is in RC mode, or chip damage may result.

2: The leakage current on the $\overline{\text{MCLR}}$ pin is strongly dependent on the applied voltage level. The specified levels represent normal operating conditions. Higher leakage current may be measured at different input voltages.

3: Negative current is defined as coming out of the pin.

4: The user may choose the better of the two specs.

PRELIMINARY

11.4 DC CHARACTERISTICS: PIC16F84, PIC16F83 (Commercial, Industrial) PIC16LF84, PIC16F83 (Commercial, Industrial)

DC Characteristics **All Pins Except** **Power Supply Pins**			**Standard Operating Conditions (unless otherwise stated)** Operating temperature 0°C ≤ TA ≤ +70°C (commercial) -40°C ≤ TA ≤ +85°C (industrial) Operating voltage VDD range as described in DC spec Section 11.1 and Section 11.2.				
Parameter No.	**Sym**	**Characteristic**	**Min**	**Typ†**	**Max**	**Units**	**Conditions**
		Capacitive Loading Specs on Output Pins					
D100	COSC2	OSC2 pin	—	—	15	pF	In XT, HS and LP modes when external clock is used to drive OSC1.
D101	CIO	All I/O pins and OSC2 (RC mode)	—	—	50	pF	
		Data EEPROM Memory					
D120	ED	Endurance	1M	10M	—	E/W	25°C at 5V
D121	VDRW	VDD for read/write	VMIN	—	6.0	V	VMIN = Minimum operating voltage
D122	TDEW	Erase/Write cycle time	—	10	20*	ms	
		Program Flash Memory					
D130	EP	Endurance	100	1000	—	E/W	
D131	VPR	VDD for read	VMIN	—	6.0	V	VMIN = Minimum operating voltage
D132	VPEW	VDD for erase/write	4.5	—	5.5	V	
D133	TPEW	Erase/Write cycle time	—	10	—	ms	

* These parameters are characterized but not tested.

† Data in “Typ” column is at 5.0V, 25°C unless otherwise stated. These parameters are for design guidance only and are not tested.

PRELIMINARY

© 1998 Microchip Technology Inc.

TABLE 11-2 TIMING PARAMETER SYMBOLOGY

The timing parameter symbols have been created following one of the following formats:

1. TppS2ppS
2. TppS

T			
F	Frequency	T	Time

Lowercase symbols (pp) and their meanings:

pp			
2	to	os,osc	OSC1
ck	CLKOUT	ost	oscillator start-up timer
cy	cycle time	pwrt	power-up timer
io	I/O port	rbt	RBx pins
inp	INT pin	t0	T0CKI
mc	$\overline{\text{MCLR}}$	wdt	watchdog timer

Uppercase symbols and their meanings:

S			
F	Fall	P	Period
H	High	R	Rise
I	Invalid (Hi-impedance)	V	Valid
L	Low	Z	High Impedance

FIGURE 11-1: PARAMETER MEASUREMENT INFORMATION

All timings are measure between high and low measurement points as indicated in the figures below.

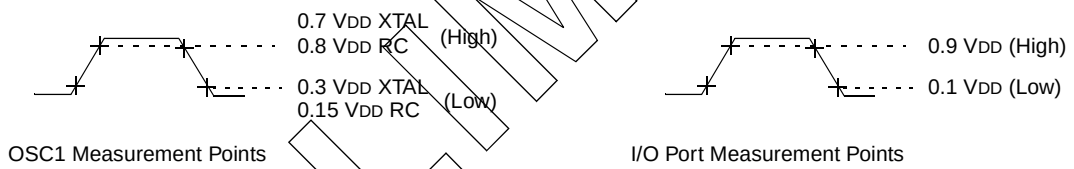

FIGURE 11-2: LOAD CONDITIONS

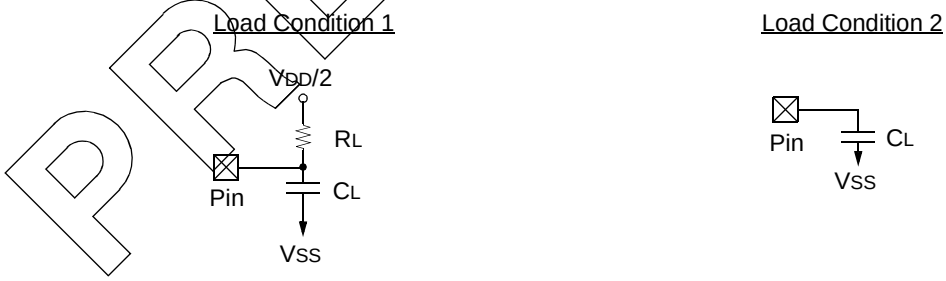

RL = 464Ω

CL = 50 pF for all pins except OSC2.

15 pF for OSC2 output.

PRELIMINARY

11.5 Timing Diagrams and Specifications

FIGURE 11-3: EXTERNAL CLOCK TIMING

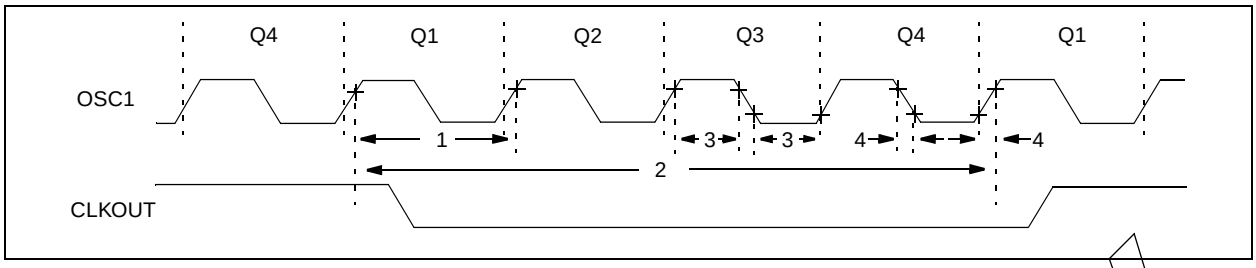

TABLE 11-3 EXTERNAL CLOCK TIMING REQUIREMENTS

Parameter No.	Sym	Characteristic	Min	Typ†	Max	Units	Conditions	
	FOSC	**External CLKIN Frequency(1)**	DC	—	2	MHz	XT, RC osc	PIC16LF8X-04
			DC	—	4	MHz	XT, RC osc	PIC16F8X-04
			DC	—	10	MHz	HS osc	PIC16F8X-10
			DC	—	200	kHz	LP osc	PIC16LF8X-04
		Oscillator Frequency(1)	DC	—	2	MHz	RC osc	PIC16LF8X-04
			DC	—	4	MHz	RC osc	PIC16F8X-04
			0.1	—	2	MHz	XT osc	PIC16LF8X-04
			0.1	—	4	MHz	XT osc	PIC16F8X-04
			1.0	—	10	MHz	HS osc	PIC16F8X-10
			DC	—	200	kHz	LP osc	PIC16LF8X-04
1	TOSC	**External CLKIN Period(1)**	500	—	—	ns	XT, RC osc	PIC16LF8X-04
			250	—	—	ns	XT, RC osc	PIC16F8X-04
			100	—	—	ns	HS osc	PIC16F8X-10
			5.0	—	—	µs	LP osc	PIC16LF8X-04
		Oscillator Period(1)	500	—	—	ns	RC osc	PIC16LF8X-04
			250	—	—	ns	RC osc	PIC16F8X-04
			500	—	10,000	ns	XT osc	PIC16LF8X-04
			250	—	10,000	ns	XT osc	PIC16F8X-04
			100	—	1,000	ns	HS osc	PIC16F8X-10
			5.0	—	—	µs	LP osc	PIC16LF8X-04
2	TCY	**Instruction Cycle Time(1)**	0.4	4/Fosc	DC	µs		
3	TOSL, TOSH	**Clock in (OSC1) High or Low Time**	60 *	—	—	ns	XT osc	PIC16LF8X-04
			50 *	—	—	ns	XT osc	PIC16F8X-04
			2.0 *	—	—	µs	LP osc	PIC16LF8X-04
			35 *	—	—	ns	HS osc	PIC16F8X-10
4	TOSR, TOSF	**Clock in (OSC1) Rise or Fall Time**	25 *	—	—	ns	XT osc	PIC16F8X-04
			50 *	—	—	ns	LP osc	PIC16LF8X-04
			15 *	—	—	ns	HS osc	PIC16F8X-10

* These parameters are characterized but no tested.

† Data in "Typ" column is at 5.0V, 25°C unless otherwise stated. These parameters are for design guidance only and are not tested.

Note 1: Instruction cycle period (TCY) equals four times the input oscillator time-base period. All specified values are based on characterization data for that particular oscillator type under standard operating conditions with the device executing code. Exceeding these specified limits may result in an unstable oscillator operation and/or higher than expected current consumption. All devices are tested to operate at "min." values with an external clock applied to the OSC1 pin.
When an external clock input is used, the "Max." cycle time limit is "DC" (no clock) for all devices.

PRELIMINARY

 © 1998 Microchip Technology Inc.

FIGURE 11-4: CLKOUT AND I/O TIMING

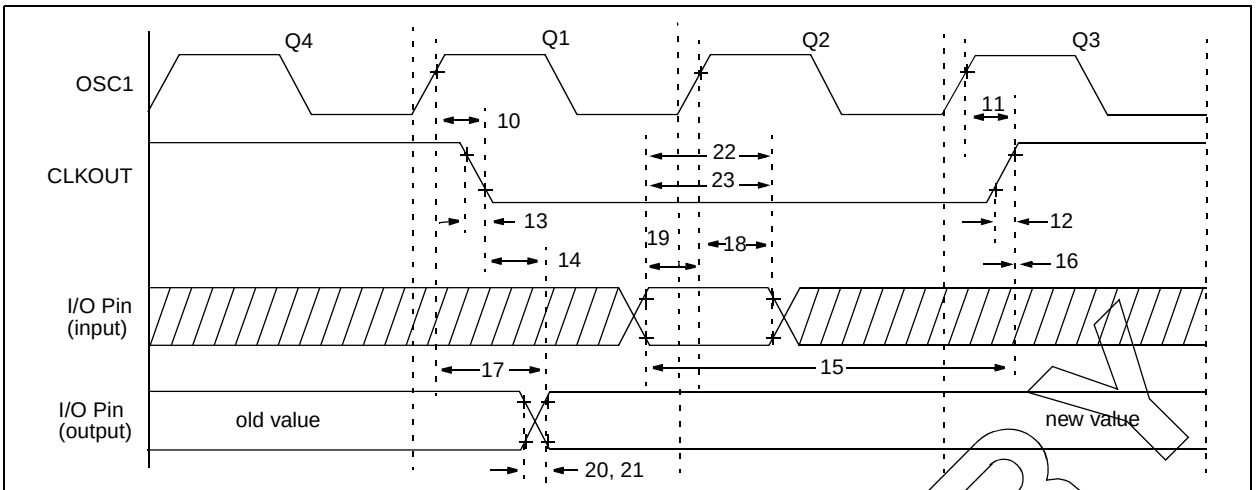

Note: All tests must be done with specified capacitive loads (Figure 11-2) 50 pF on I/O pins and CLKOUT.

TABLE 11-4 CLKOUT AND I/O TIMING REQUIREMENTS

Parameter No.	Sym	Characteristic		Min	Typ†	Max	Units	Conditions
10	TosH2ckL	OSC1↑ to CLKOUT↓	PIC16F8X	—	15	30 *	ns	Note 1
10A			PIC16LF8X	—	15	120 *	ns	Note 1
11	TosH2ckH	OSC1↑ to CLKOUT↑	PIC16F8X	—	15	30 *	ns	Note 1
11A			PIC16LF8X	—	15	120 *	ns	Note 1
12	TckR	CLKOUT rise time	PIC16F8X	—	15	30 *	ns	Note 1
12A			PIC16LF8X	—	15	100 *	ns	Note 1
13	TckF	CLKOUT fall time	PIC16F8X	—	15	30 *	ns	Note 1
13A			PIC16LF8X	—	15	100 *	ns	Note 1
14	TckL2ioV	CLKOUT ↓ to Port out valid		—	—	0.5TCY +20 *	ns	Note 1
15	TioV2ckH	Port in valid before	PIC16F8X	0.30TCY + 30 *	—	—	ns	Note 1
		CLKOUT↑	PIC16LF8X	0.30TCY + 80 *	—	—	ns	Note 1
16	TckH2ioI	Port in hold after CLKOUT ↑		0 *	—	—	ns	Note 1
17	TosH2ioV	OSC1↑ (Q1 cycle) to	PIC16F8X	—	—	125 *	ns	
		Port out valid	PIC16LF8X	—	—	250 *	ns	
18	TosH2ioI	OSC1↑ (Q2 cycle) to Port input invalid (I/O in hold time)	PIC16F8X	10 *	—	—	ns	
			PIC16LF8X	10 *	—	—	ns	
19	TioV2osH	Port input valid to OSC1↑ (I/O in setup time)	PIC16F8X	-75 *	—	—	ns	
			PIC16LF8X	-175 *	—	—	ns	
20	TioR	Port output rise time	PIC16F8X	—	10	35 *	ns	
20A			PIC16LF8X	—	10	70 *	ns	
21	TioF	Port output fall time	PIC16F8X	—	10	35 *	ns	
21A			PIC16LF8X	—	10	70 *	ns	
22	Tinp	INT pin high	PIC16F8X	20 *	—	—	ns	
22A		or low time	PIC16LF8X	55 *	—	—	ns	
23	Trbp	RB7:RB4 change INT	PIC16F8X	TOSC §	—	—	ns	
23A		high or low time	PIC16LF8X	TOSC §	—	—	ns	

* These parameters are characterized but not tested.

† Data in "Typ" column is at 5.0V, 25°C unless otherwise stated. These parameters are for design guidance only and are not tested.

§ By design

Note 1: Measurements are taken in RC Mode where CLKOUT output is 4 x TOSC.

PRELIMINARY

FIGURE 11-5: RESET, WATCHDOG TIMER, OSCILLATOR START-UP TIMER AND POWER-UP TIMER TIMING

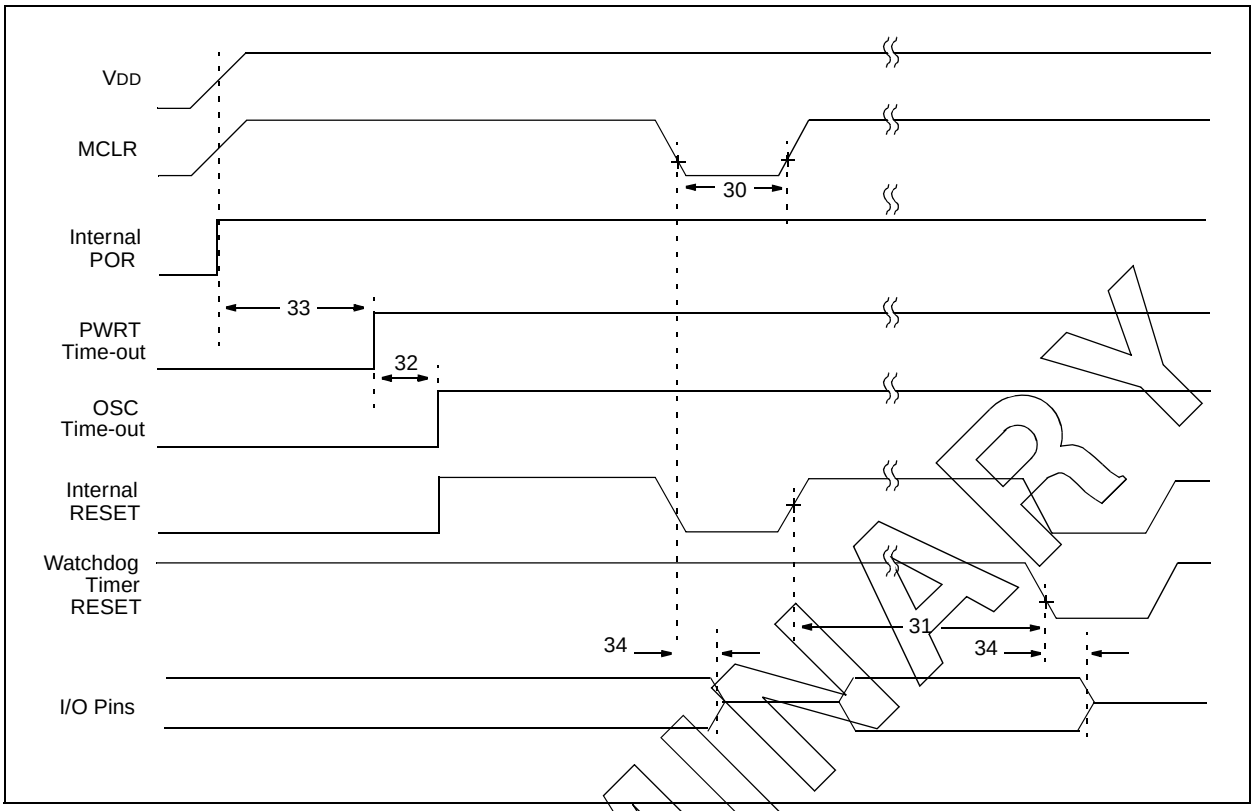

TABLE 11-5 RESET, WATCHDOG TIMER, OSCILLATOR START-UP TIMER AND POWER-UP TIMER REQUIREMENTS

Parameter No.	Sym	Characteristic	Min	Typ†	Max	Units	Conditions
30	TmcL	$\overline{\text{MCLR}}$ Pulse Width (low)	1000 *	—	—	ns	2.0V ≤ VDD ≤ 6.0V
31	Twdt	Watchdog Timer Time-out Period (No Prescaler)	7 *	18	33 *	ms	VDD = 5.0V
32	Tost	Oscillation Start-up Timer Period		1024TOSC		ms	TOSC = OSC1 period
33	Tpwrt	Power-up Timer Period	28 *	72	132 *	ms	VDD = 5.0V
34	TIOZ	I/O Hi-impedance from $\overline{\text{MCLR}}$ Low or reset	—	—	100 *	ns	

* These parameters are characterized but not tested.

† Data in "Typ" column is at 5V, 25°C unless otherwise stated. These parameters are for design guidance only and are not tested.

PRELIMINARY

© 1998 Microchip Technology Inc.

FIGURE 11-6: TIMER0 CLOCK TIMINGS

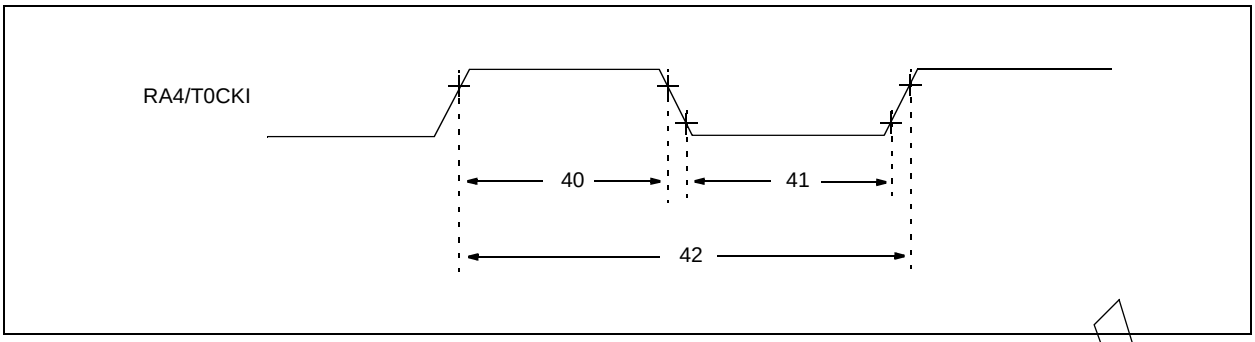

TABLE 11-6 TIMER0 CLOCK REQUIREMENTS

Parameter No.	Sym	Characteristic		Min	Typ†	Max	Units	Conditions
40	Tt0H	T0CKI High Pulse Width	No Prescaler	0.5TCY + 20 *	—	—	ns	
			With Prescaler	50 * 30 *	— —	— —	ns ns	2.0V ≤ VDD ≤ 3.0V 3.0V ≤ VDD ≤ 6.0V
41	Tt0L	T0CKI Low Pulse Width	No Prescaler	0.5TCY + 20 *	—	—	ns	
			With Prescaler	50 * 20 *	— —	— —	ns ns	2.0V ≤ VDD ≤ 3.0V 3.0V ≤ VDD ≤ 6.0V
42	Tt0P	T0CKI Period		$\frac{T_{CY} + 40}{N}$ *	—	—	ns	N = prescale value (2, 4, ..., 256)

* These parameters are characterized but not tested.

† Data in "Typ" column is at 5.0V, 25°C unless otherwise stated. These parameters are for design guidance only and are not tested.

PRELIMINARY

NOTES:

PRELIMINARY

© 1998 Microchip Technology Inc.

12.0 ELECTRICAL CHARACTERISTICS FOR PIC16CR83 AND PIC16CR84

Absolute Maximum Ratings †

Ambient temperature under bias ..... -55°C to +125°C

Storage temperature ..... -65°C to +150°C

Voltage on V_{DD} with respect to V_{SS} ..... -0.3 to +7.5V

Voltage on $\overline{MCLR}$ with respect to V_{SS}[(2)] ..... -0.3 to +14V

Voltage on any pin with respect to V_{SS} (except V_{DD} and $\overline{MCLR}$) ..... -0.6V to (V_{DD} + 0.6V)

Total power dissipation[(1)] ..... 800 mW

Maximum current out of V_{SS} pin ..... 150 mA

Maximum current into V_{DD} pin ..... 100 mA

Input clamp current, I_{IK} (V_I < 0 or V_I > V_{DD}) ..... ± 20 mA

Output clamp current, I_{OK} (V_O < 0 or V_O > V_{DD}) ..... ± 20 mA

Maximum output current sunk by any I/O pin ..... 25 mA

Maximum output current sourced by any I/O pin ..... 20 mA

Maximum current sunk by PORTA ..... 80 mA

Maximum current sourced by PORTA ..... 50 mA

Maximum current sunk by PORTB ..... 150 mA

Maximum current sourced by PORTB ..... 100 mA

Note 1: Power dissipation is calculated as follows: $P_{dis} = V_{DD} \times \{I_{DD} - \sum I_{OH}\} + \sum \{(V_{DD}-V_{OH}) \times I_{OH}\} + \sum(V_{OI} \times I_{OL})$

Note 2: Voltage spikes below V_{SS} at the $\overline{MCLR}$ pin, inducing currents greater than 80 mA, may cause latch-up. Thus, a series resistor of 50-100Ω should be used when applying a "low" level to the $\overline{MCLR}$ pin rather than pulling this pin directly to V_{SS}.

† NOTICE: Stresses above those listed under "Absolute Maximum Ratings" may cause permanent damage to the device. This is a stress rating only and functional operation of the device at those or any other conditions above those indicated in the operation listings of this specification is not implied. Exposure to maximum rating conditions for extended periods may affect device reliability.

PRELIMINARY

TABLE 12-1 CROSS REFERENCE OF DEVICE SPECS FOR OSCILLATOR CONFIGURATIONS AND FREQUENCIES OF OPERATION (COMMERCIAL DEVICES)

OSC	PIC16CR84-04 PIC16CR83-04	PIC16CR84-10 PIC16CR83-10	PIC16LCR84-04 PIC16LCR83-04
RC	VDD: 4.0V to 6.0V IDD: 4.5 mA max. at 5.5V IPD: 14 µA max. at 4V WDT dis Freq: 4.0 MHz max.	VDD: 4.5V to 5.5V IDD: 1.8 mA typ. at 5.5V IPD: 1.0 µA typ. at 5.5V WDT dis Freq: 4..0 MHz max.	VDD: 2.0V to 6.0V IDD: 4.5 mA max. at 5.5V IPD: 5 µA max. at 2V WDT dis Freq: 2.0 MHz max.
XT	VDD: 4.0V to 6.0V IDD: 4.5 mA max. at 5.5V IPD: 14 µA max. at 4V WDT dis Freq: 4.0 MHz max.	VDD: 4.5V to 5.5V IDD: 1.8 mA typ. at 5.5V IPD: 1.0 µA typ. at 5.5V WDT dis Freq: 4.0 MHz max.	VDD: 2.0V to 6.0V IDD: 4.5 mA max. at 5.5V IPD: 5 µA max. at 2V WDT dis Freq: 2.0 MHz max.
HS	VDD: 4.5V to 5.5V IDD: 4.5 mA typ. at 5.5V IPD: 1.0 µA typ. at 4.5V WDT dis Freq: 4.0 MHz max.	VDD: 4.5V to 5.5V IDD: 10 mA max. at 5.5V typ. IPD: 1.0 µA typ. at 4.5V WDT dis Freq: 10 MHz max.	Do not use in HS mode
LP	VDD: 4.0V to 6.0V IDD: 48 µA typ. at 32 kHz, 2.0V IPD: 0.6 µA typ. at 3.0V WDT dis Freq: 200 kHz max.	Do not use in LP mode	VDD: 2.0V to 6.0V IDD: 45 µA max. at 32 kHz, 2.0V IPD: 5 µA max. at 2V WDT dis Freq: 200 kHz max.

The shaded sections indicate oscillator selections which are tested for functionality, but not for MIN/MAX specifications. It is recommended that the user select the device type that ensures the specifications required.

PRELIMINARY

© 1998 Microchip Technology Inc.

12.1 DC CHARACTERISTICS: PIC16CR84, PIC16CR83 (Commercial, Industrial)

DC Characteristics Power Supply Pins			Standard Operating Conditions (unless otherwise stated) Operating temperature 0°C ≤ TA ≤ +70°C (commercial) -40°C ≤ TA ≤ +85°C (industrial)				
Parameter No.	**Sym**	**Characteristic**	**Min**	**Typ†**	**Max**	**Units**	**Conditions**
D001 D001A	VDD	Supply Voltage	4.0 4.5	— —	6.0 5.5	V V	XT, RC and LP osc configuration HS osc configuration
D002	VDR	RAM Data Retention Voltage(1)	1.5*	—	—	V	Device in SLEEP mode
D003	VPOR	VDD start voltage to ensure internal Power-on Reset signal	—	VSS	—	V	See section on Power-on Reset for details
D004	SVDD	VDD rise rate to ensure internal Power-on Reset signal	0.05*	—	—	V/ms	See section on Power-on Reset for details
	IDD	Supply Current(2)					RC and XT osc configuration(4)
D010			—	1.8	4.5	mA	FOSC = 4.0 MHz, VDD = 5.5V
D010A			—	7.3	10	mA	FOSC = 4.0 MHz, VDD = 5.5V (During EEPROM programming)
							HS OSC CONFIGURATION (PIC16CR84-10)
D013			—	5	10	mA	FOSC = 10 MHz, VDD = 5.5V
D020	IPD	Power-down Current(3)	—	7.0	28	µA	VDD = 4.0V, WDT enabled, industrial
D021			—	1.0	14	µA	VDD = 4.0V, WDT disabled, commercial
D021A			—	1.0	16	µA	VDD = 4.0V, WDT disabled, industrial

* These parameters are characterized but not tested.

† Data in "Typ" column is at 5.0V, 25°C unless otherwise stated. These parameters are for design guidance only and are not tested.

Note 1: This is the limit to which VDD can be lowered in SLEEP mode without losing RAM data.

2: The supply current is mainly a function of the operating voltage and frequency. Other factors such as I/O pin loading and switching rate, oscillator type, internal code execution pattern, and temperature also have an impact on the current consumption.
The test conditions for all IDD measurements in active operation mode are:
OSC1=external square wave, from rail to rail; all I/O pins tristated, pulled to VDD, T0CKI = VDD, $\overline{\text{MCLR}}$ = VDD; WDT enabled/disabled as specified.

3: The power down current in SLEEP mode does not depend on the oscillator type. Power-down current is measured with the part in SLEEP mode, with all I/O pins in hi-impedance state and tied to VDD and VSS.

4: For RC osc configuration, current through Rext is not included. The current through the resistor can be estimated by the formula IR = VDD/2Rext (mA) with Rext in kOhm.

PRELIMINARY

12.2 DC CHARACTERISTICS: PIC16LCR84, PIC16LCR83 (Commercial, Industrial)

DC Characteristics Power Supply Pins			Standard Operating Conditions (unless otherwise stated) Operating temperature 0°C ≤ TA ≤ +70°C (commercial) -40°C ≤ TA ≤ +85°C (industrial)				
Parameter No.	**Sym**	**Characteristic**	**Min**	**Typ†**	**Max**	**Units**	**Conditions**
D001	VDD	Supply Voltage	2.0	—	6.0	V	XT, RC, and LP osc configuration
D002	VDR	RAM Data Retention Voltage(1)	1.5*	—	—	V	Device in SLEEP mode
D003	VPOR	VDD start voltage to ensure internal Power-on Reset signal	—	VSS	—	V	See section on Power-on Reset for details
D004	SVDD	VDD rise rate to ensure internal Power-on Reset signal	0.05*	—	—	V/ms	See section on Power-on Reset for details
	IDD	Supply Current(2)					RC and XT osc configuration(4)
D010			—	1	4	mA	FOSC = 2.0 MHz, VDD = 5.5V
D010A			—	7.3	10	mA	FOSC = 2.0 MHz, VDD = 5.5V (During EEPROM programming)
							LP osc configuration
D014			—	15	45	µA	FOSC = 32 kHz, VDD = 2.0V, WDT disabled
D020	IPD	Power-down Current(3)	—	3.0	16	µA	VDD = 2.0V, WDT enabled, industrial
D021			—	0.4	5.0	µA	VDD = 2.0V, WDT disabled, commercial
D021A			—	0.4	6.0	µA	VDD = 2.0V, WDT disabled, industrial

* These parameters are characterized but not tested.

† Data in "Typ" column is at 5.0V, 25°C unless otherwise stated. These parameters are for design guidance only and are not tested.

Note 1: This is the limit to which VDD can be lowered in SLEEP mode without losing RAM data.

2: The supply current is mainly a function of the operating voltage and frequency. Other factors such as I/O pin loading and switching rate, oscillator type, internal code execution pattern, and temperature also have an impact on the current consumption.
The test conditions for all IDD measurements in active operation mode are:
OSC1=external square wave, from rail to rail; all I/O pins tristated, pulled to VDD, T0CKI = VDD, $\overline{MCLR}$ = VDD; WDT enabled/disabled as specified.

3: The power down current in SLEEP mode does not depend on the oscillator type. Power-down current is measured with the part in SLEEP mode, with all I/O pins in hi-impedance state and tied to VDD and VSS.

4: For RC osc configuration, current through Rext is not included. The current through the resistor can be estimated by the formula IR = VDD/2Rext (mA) with Rext in kOhm.

PRELIMINARY

 © 1998 Microchip Technology Inc.

12.3 DC CHARACTERISTICS: PIC16CR84, PIC16CR83 (Commercial, Industrial) PIC16LCR84, PIC16LCR83 (Commercial, Industrial)

DC Characteristics **All Pins Except** **Power Supply Pins**	**Standard Operating Conditions (unless otherwise stated)** Operating temperature 0°C ≤ TA ≤ +70°C (commercial) -40°C ≤ TA ≤ +85°C (industrial) Operating voltage VDD range as described in DC spec Section 12.1 and Section 12.2.

Parameter No.	Sym	Characteristic	Min	Typ†	Max	Units	Conditions
		Input Low Voltage					
	VIL	I/O ports					
D030		with TTL buffer	VSS	—	0.8	V	4.5 V ≤ Vdd ≤ 5.5 V(4)
D030A			VSS	—	0.16VDD	V	entire range(4)
D031		with Schmitt Trigger buffer	VSS	—	0.2VDD	V	entire range
D032		$\overline{\text{MCLR}}$, RA4/T0CKI	Vss	—	0.2VDD	V	
D033		OSC1 (XT, HS and LP modes)(1)	Vss	—	0.3VDD	V	
D034		OSC1 (RC mode)	Vss	—	0.1VDD	V	
		Input High Voltage					
	VIH	I/O ports		—			
D040		with TTL buffer	2.4	—	VDD	V	4.5 V ≤ VDD ≤ 5.5V(4)
D040A			0.48VDD	—	VDD	V	entire range(4)
D041		with Schmitt Trigger buffer	0.45VDD	—	VDD		entire range
D042		$\overline{\text{MCLR}}$, RA4/T0CKI, OSC1 (RC mode)	0.85 VDD	—	VDD	V	
D043		OSC1 (XT, HS and LP modes)(1)	0.7 VDD	—	VDD	V	
D050	VHYS	Hysteresis of Schmitt Trigger inputs	TBD	—	—	V	
D070	IPURB	PORTB weak pull-up current	50*	250*	400*	μA	VDD = 5.0V, VPIN = VSS
		Input Leakage Current(2,3)					
D060	IIL	I/O ports	—	—	±1	μA	Vss ≤ VPIN ≤ VDD, Pin at hi-impedance
D061		$\overline{\text{MCLR}}$, RA4/T0CKI	—	—	±5	μA	Vss ≤ VPIN ≤ VDD
D063		OSC1	—	—	±5	μA	Vss ≤ VPIN ≤ VDD, XT, HS and LP osc configuration
		Output Low Voltage					
D080	VOL	I/O ports	—	—	0.6	V	IOL = 8.5 mA, VDD = 4.5V
D083		OSC2/CLKOUT	—	—	0.6	V	IOL = 1.6 mA, VDD = 4.5V
		Output High Voltage					
D090	VOH	I/O ports(3)	VDD-0.7	—	—	V	IOH = -3.0 mA, VDD = 4.5V
D092		OSC2/CLKOUT	VDD-0.7	—	—	V	IOH = -1.3 mA, VDD = 4.5V

* These parameters are characterized but not tested.

† Data in "Typ" column is at 5.0V, 25°C unless otherwise stated. These parameters are for design guidance only and are not tested.

Note 1: In RC oscillator configuration, the OSC1 pin is a Schmitt Trigger input. Do not drive the PIC16CR8X with an external clock while the device is in RC mode, or chip damage may result.

2: The leakage current on the $\overline{\text{MCLR}}$ pin is strongly dependent on the applied voltage level. The specified levels represent normal operating conditions. Higher leakage current may be measured at different input voltages.

3: Negative current is defined as coming out of the pin.

4: The user may choose the better of the two specs.

PRELIMINARY

12.4 DC CHARACTERISTICS: PIC16CR84, PIC16CR83 (Commercial, Industrial) PIC16LCR84, PIC16LCR83 (Commercial, Industrial)

DC Characteristics **All Pins Except** **Power Supply Pins**			**Standard Operating Conditions (unless otherwise stated)** Operating temperature 0°C ≤ TA ≤ +70°C (commercial) -40°C ≤ TA ≤ +85°C (industrial) Operating voltage VDD range as described in DC spec Section 12.1 and Section 12.2.				
Parameter No.	**Sym**	**Characteristic**	**Min**	**Typ†**	**Max**	**Units**	**Conditions**
		Capacitive Loading Specs on Output Pins					
D100	COSC2	OSC2 pin	—	—	15	pF	In XT, HS and LP modes when external clock is used to drive OSC1.
D101	CIO	All I/O pins and OSC2 (RC mode)	—	—	50	pF	
		Data EEPROM Memory					
D120	ED	Endurance	1M	10M	—	E/W	25°C at 5V
D121	VDRW	VDD for read/write	VMIN	—	6.0	V	VMIN = Minimum operating voltage
D122	TDEW	Erase/Write cycle time	—	10	20*	ms	

* These parameters are characterized but not tested.

† Data in “Typ” column is at 5.0V, 25°C unless otherwise stated. These parameters are for design guidance only and are not tested.

PRELIMINARY

© 1998 Microchip Technology Inc.

TABLE 12-2 TIMING PARAMETER SYMBOLOGY

The timing parameter symbols have been created following one of the following formats:

1. TppS2ppS
2. TppS

T			
F	Frequency	T	Time

Lowercase symbols (pp) and their meanings:

pp			
2	to	os,osc	OSC1
ck	CLKOUT	ost	oscillator start-up timer
cy	cycle time	pwrt	power-up timer
io	I/O port	rbt	RBx pins
inp	INT pin	t0	T0CKI
mc	$\overline{MCLR}$	wdt	watchdog timer

Uppercase symbols and their meanings:

S			
F	Fall	P	Period
H	High	R	Rise
I	Invalid (Hi-impedance)	V	Valid
L	Low	Z	High Impedance

FIGURE 12-1: PARAMETER MEASUREMENT INFORMATION

All timings are measure between high and low measurement points as indicated in the figures below.

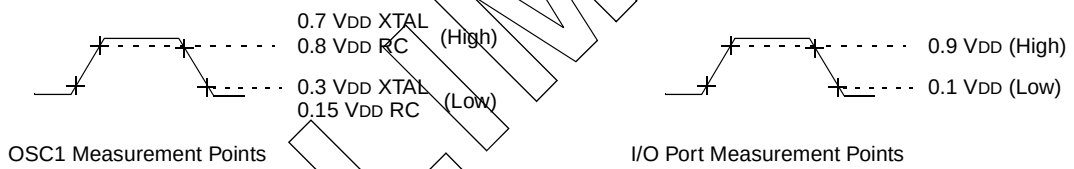

FIGURE 12-2: LOAD CONDITIONS

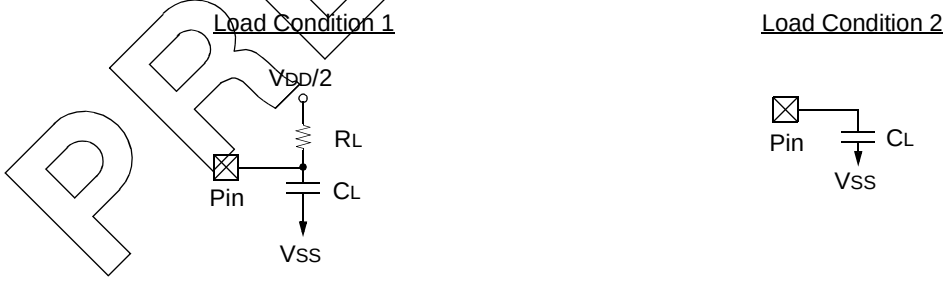

RL = 464Ω

CL = 50 pF for all pins except OSC2.

15 pF for OSC2 output.

PRELIMINARY

12.5 Timing Diagrams and Specifications

FIGURE 12-3: EXTERNAL CLOCK TIMING

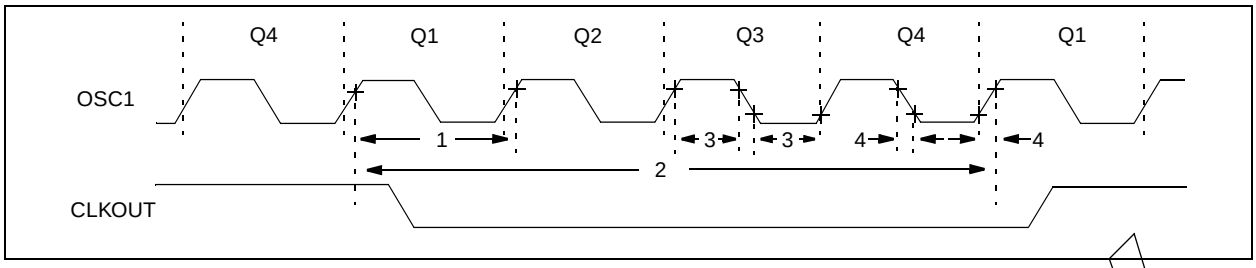

TABLE 12-3 EXTERNAL CLOCK TIMING REQUIREMENTS

Parameter No.	Sym	Characteristic	Min	Typ†	Max	Units	Conditions	
	FOSC	**External CLKIN Frequency(1)**	DC	—	2	MHz	XT, RC osc	PIC16LCR8X-04
			DC	—	4	MHz	XT, RC osc	PIC16CR8X-04
			DC	—	10	MHz	HS osc	PIC16CR8X-10
			DC	—	200	kHz	LP osc	PIC16LCR8X-04
		Oscillator Frequency(1)	DC	—	2	MHz	RC osc	PIC16LCR8X-04
			DC	—	4	MHz	RC osc	PIC16CR8X-04
			0.1	—	2	MHz	XT osc	PIC16LCR8X-04
			0.1	—	4	MHz	XT osc	PIC16CR8X-04
			1.0	—	10	MHz	HS osc	PIC16CR8X-10
			DC	—	200	kHz	LP osc	PIC16LCR8X-04
1	TOSC	**External CLKIN Period(1)**	500	—	—	ns	XT, RC osc	PIC16LCR8X-04
			250	—	—	ns	XT, RC osc	PIC16CR8X-04
			100	—	—	ns	HS osc	PIC16CR8X-10
			5.0	—	—	µs	LP osc	PIC16LCR8X-04
		Oscillator Period(1)	500	—	—	ns	RC osc	PIC16LCR8X-04
			250	—	—	ns	RC osc	PIC16CR8X-04
			500	—	10,000	ns	XT osc	PIC16LCR8X-04
			250	—	10,000	ns	XT osc	PIC16CR8X-04
			100	—	1,000	ns	HS osc	PIC16CR8X-10
			5.0	—	—	µs	LP osc	PIC16LCR8X-04
2	TCY	**Instruction Cycle Time(1)**	0.4	4/Fosc	DC	µs		
3	TOSL, TOSH	**Clock in (OSC1) High or Low Time**	60 *	—	—	ns	XT osc	PIC16LCR8X-04
			50 *	—	—	ns	XT osc	PIC16CR8X-04
			2.0 *	—	—	µs	LP osc	PIC16LCR8X-04
			35 *	—	—	ns	HS osc	PIC16CR8X-10
4	TOSR, TOSF	**Clock in (OSC1) Rise or Fall Time**	25 *	—	—	ns	XT osc	PIC16CR8X-04
			50 *	—	—	ns	LP osc	PIC16LCR8X-04
			15 *	—	—	ns	HS osc	PIC16CR8X-10

* These parameters are characterized but not tested.

† Data in "Typ" column is at 5.0V, 25°C unless otherwise stated. These parameters are for design guidance only and are not tested.

Note 1: Instruction cycle period (TCY) equals four times the input oscillator time base period. All specified values are based on characterization data for that particular oscillator type under standard operating conditions with the device executing code. Exceeding these specified limits may result in an unstable oscillator operation and/or higher than expected current consumption. All devices are tested to operate at "min." values with an external clock applied to the OSC1 pin.
When an external clock input is used, the "Max." cycle time limit is "DC" (no clock) for all devices.

PRELIMINARY

 © 1998 Microchip Technology Inc.

FIGURE 12-4: CLKOUT AND I/O TIMING

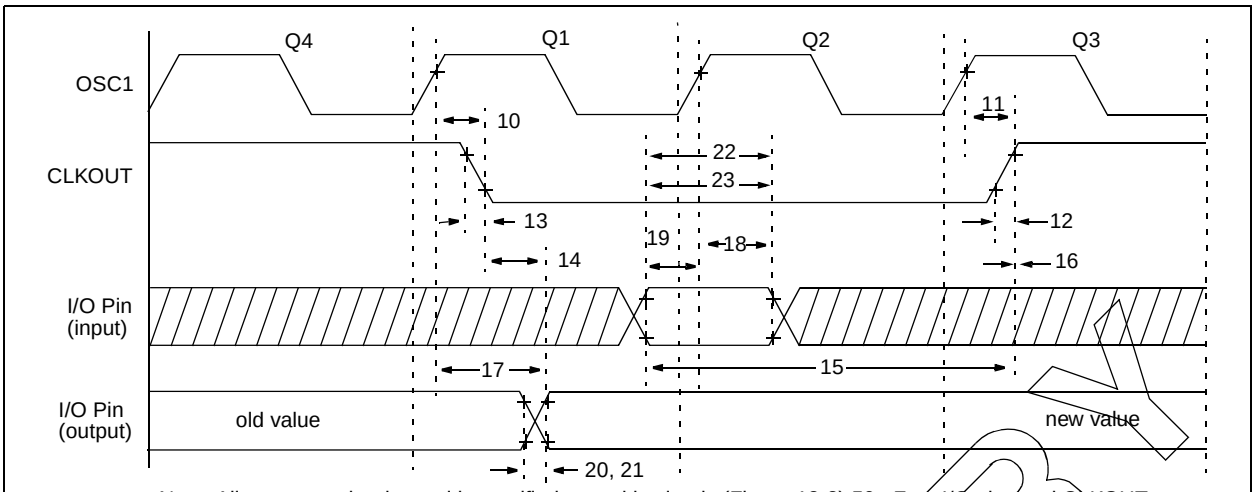

Note: All tests must be done with specified capacitive loads (Figure 12-2) 50 pF on I/O pins and CLKOUT.

TABLE 12-4 CLKOUT AND I/O TIMING REQUIREMENTS

Parameter No.	Sym	Characteristic		Min	Typ†	Max	Units	Conditions
10	TosH2ckL	OSC1↑ to CLKOUT↓	PIC16CR8X	—	15	30 *	ns	Note 1
10A			PIC16LCR8X	—	15	120 *	ns	Note 1
11	TosH2ckH	OSC1↑ to CLKOUT↑	PIC16CR8X	—	15	30 *	ns	Note 1
11A			PIC16LCR8X	—	15	120 *	ns	Note 1
12	TckR	CLKOUT rise time	PIC16CR8X	—	15	30 *	ns	Note 1
12A			PIC16LCR8X	—	15	100 *	ns	Note 1
13	TckF	CLKOUT fall time	PIC16CR8X	—	15	30 *	ns	Note 1
13A			PIC16LCR8X	—	15	100 *	ns	Note 1
14	TckL2ioV	CLKOUT ↓ to Port out valid		—	—	0.5TCY +20 *	ns	Note 1
15	TioV2ckH	Port in valid before	PIC16CR8X	0.30TCY + 30 *	—	—	ns	Note 1
		CLKOUT ↑	PIC16LCR8X	0.30TCY + 80 *	—	—	ns	Note 1
16	TckH2ioI	Port in hold after CLKOUT ↑		0 *	—	—	ns	Note 1
17	TosH2ioV	OSC1↑ (Q1 cycle) to	PIC16CR8X	—	—	125 *	ns	
		Port out valid	PIC16LCR8X	—	—	250 *	ns	
18	TosH2ioI	OSC1↑ (Q2 cycle) to Port input invalid (I/O in hold time)	PIC16CR8X	10 *	—	—	ns	
			PIC16LCR8X	10 *	—	—	ns	
19	TioV2osH	Port input valid to OSC1↑ (I/O in setup time)	PIC16CR8X	-75 *	—	—	ns	
			PIC16LCR8X	-175 *	—	—	ns	
20	TioR	Port output rise time	PIC16CR8X	—	10	35 *	ns	
20A			PIC16LCR8X	—	10	70 *	ns	
21	TioF	Port output fall time	PIC16CR8X	—	10	35 *	ns	
21A			PIC16LCR8X	—	10	70 *	ns	
22	Tinp	INT pin high	PIC16CR8X	20 *	—	—	ns	
22A		or low time	PIC16LCR8X	55 *	—	—	ns	
23	Trbp	RB7:RB4 change INT	PIC16CR8X	TOSC §	—	—	ns	
23A		high or low time	PIC16LCR8X	TOSC §	—	—	ns	

* These parameters are characterized but not tested.

† Data in "Typ" column is at 5.0V, 25°C unless otherwise stated. These parameters are for design guidance only and are not tested.

§ By design

Note 1: Measurements are taken in RC Mode where CLKOUT output is 4 x TOSC.

PRELIMINARY

FIGURE 12-5: RESET, WATCHDOG TIMER, OSCILLATOR START-UP TIMER AND POWER-UP TIMER TIMING

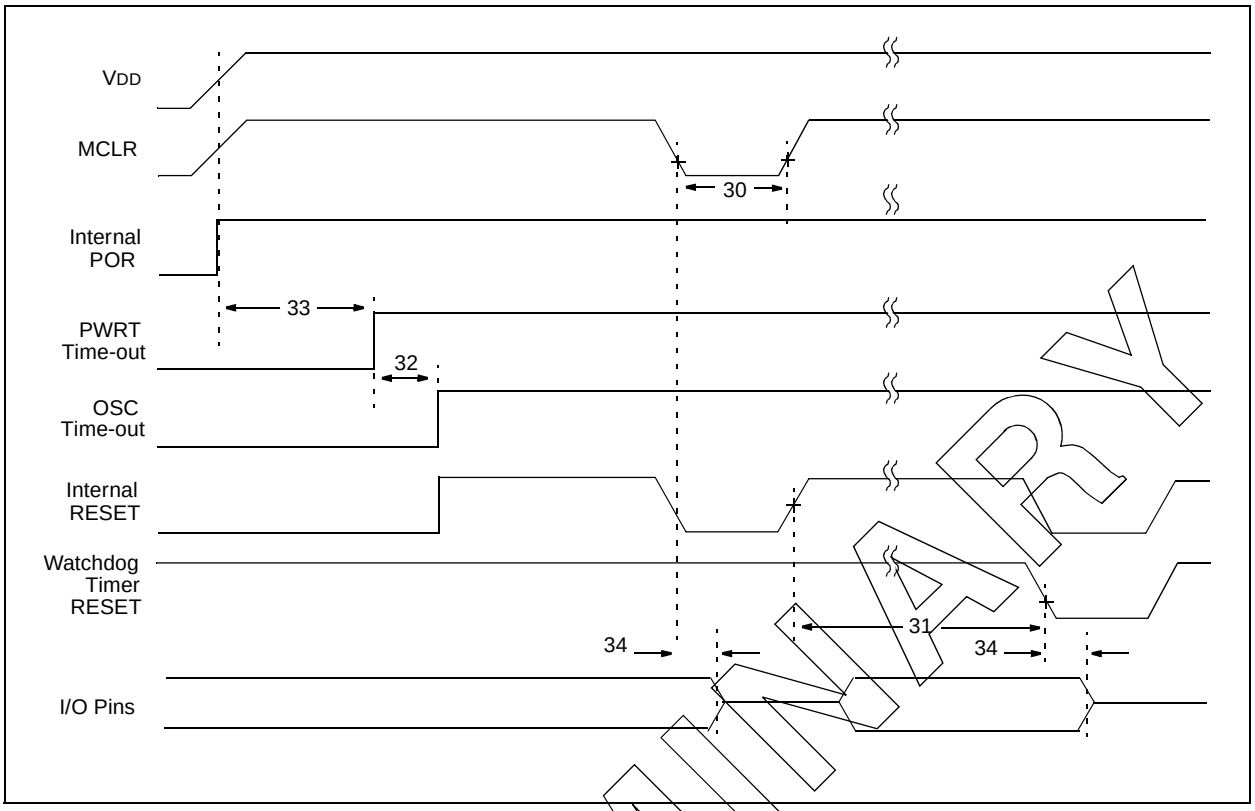

TABLE 12-5 RESET, WATCHDOG TIMER, OSCILLATOR START-UP TIMER AND POWER-UP TIMER REQUIREMENTS

Parameter No.	Sym	Characteristic	Min	Typ†	Max	Units	Conditions
30	TmcL	$\overline{\text{MCLR}}$ Pulse Width (low)	1000 *	—	—	ns	2.0V ≤ VDD ≤ 6.0V
31	Twdt	Watchdog Timer Time-out Period (No Prescaler)	7 *	18	33 *	ms	VDD = 5.0V
32	Tost	Oscillation Start-up Timer Period		1024TOSC		ms	TOSC = OSC1 period
33	Tpwrt	Power-up Timer Period	28 *	72	132 *	ms	VDD = 5.0V
34	TIOZ	I/O Hi-impedance from $\overline{\text{MCLR}}$ Low or reset	—	—	100 *	ns	

* These parameters are characterized but not tested.

† Data in "Typ" column is at 5V, 25°C unless otherwise stated. These parameters are for design guidance only and are not tested.

PRELIMINARY

© 1998 Microchip Technology Inc.

FIGURE 12-6: TIMER0 CLOCK TIMINGS

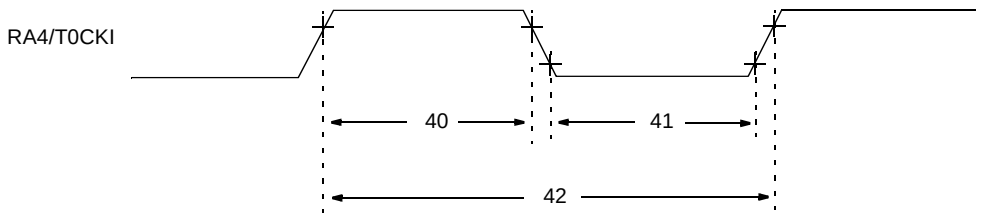

TABLE 12-6 TIMER0 CLOCK REQUIREMENTS

Parameter No.	Sym	Characteristic		Min	Typ†	Max	Units	Conditions
40	Tt0H	T0CKI High Pulse Width	No Prescaler	0.5TCY + 20 *	—	—	ns	
			With Prescaler	50 * 30 *	— —	— —	ns ns	2.0V ≤ VDD ≤ 3.0V 3.0V ≤ VDD ≤ 6.0V
41	Tt0L	T0CKI Low Pulse Width	No Prescaler	0.5TCY + 20 *	—	—	ns	
			With Prescaler	50 * 20 *	— —	— —	ns ns	2.0V ≤ VDD ≤ 3.0V 3.0V ≤ VDD ≤ 6.0V
42	Tt0P	T0CKI Period		TCY + 40 * N	—	—	ns	N = prescale value (2, 4, ..., 256)

* These parameters are characterized but not tested.

† Data in "Typ" column is at 5.0V, 25°C unless otherwise stated. These parameters are for design guidance only and are not tested.

PRELIMINARY

NOTES:

PRELIMINARY

© 1998 Microchip Technology Inc.

13.0 DC & AC CHARACTERISTICS GRAPHS/TABLES

The graphs and tables provided in this section are for **design guidance** and are **not tested or guaranteed**.

In some graphs or tables, the data presented are **outside specified operating range** (i.e., outside specified VDD range). This is for **information only** and devices are guaranteed to operate properly only within the specified range.

The data presented in this section is a **statistical summary** of data collected on units from different lots over a period of time and matrix samples. 'Typical' represents the mean of the distribution at 25°C, while 'max' or 'min' represents (mean + 3σ) and (mean - 3σ) respectively, where σ is standard deviation.

FIGURE 13-1: TYPICAL RC OSCILLATOR FREQUENCY vs. TEMPERATURE

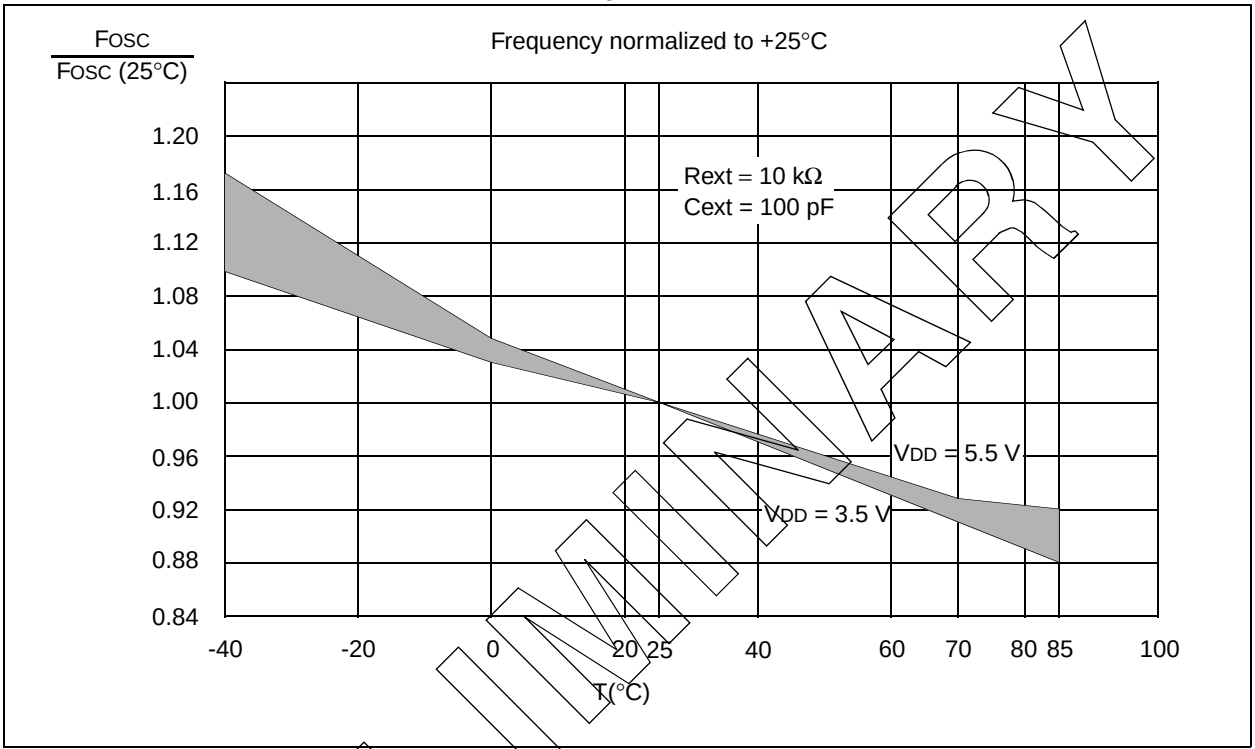

TABLE 13-1 RC OSCILLATOR FREQUENCIES*

Cext	Rext	Average Fosc @ 5V, 25°C	
			Part to Part Variation
20 pF	5 k	4.61 MHz	± 25%
	10 k	2.66 MHz	± 24%
	100 k	311 kHz	± 39%
100 pF	5 k	1.34 MHz	± 21%
	10 k	756 kHz	± 18%
	100 k	82.8 kHz	± 28%
300 pF	5 k	428 kHz	± 13%
	10 k	243 kHz	± 13%
	100 k	26.2 kHz	± 23%

* Measured on DIP packages. The percentage variation indicated here is part-to-part variation due to normal process distribution. The variation indicated is ±3 standard deviation from average value for full VDD range.

PRELIMINARY

FIGURE 13-2: TYPICAL RC OSCILLATOR FREQUENCY vs. V_{DD}, C_{EXT} = 20 pF

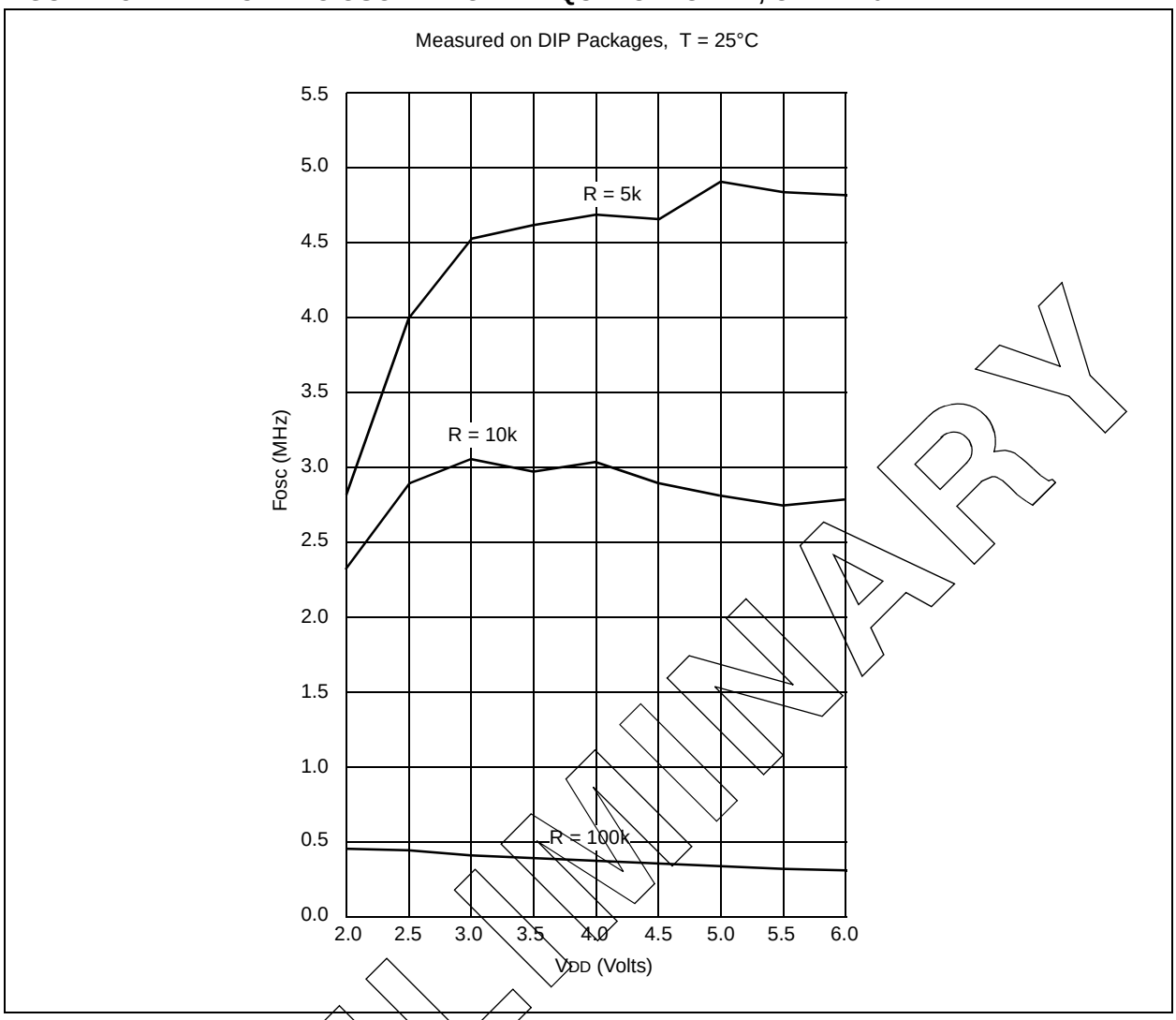

PRELIMINARY

© 1998 Microchip Technology Inc.

FIGURE 13-3: TYPICAL RC OSCILLATOR FREQUENCY vs. VDD, CEXT = 100 pF

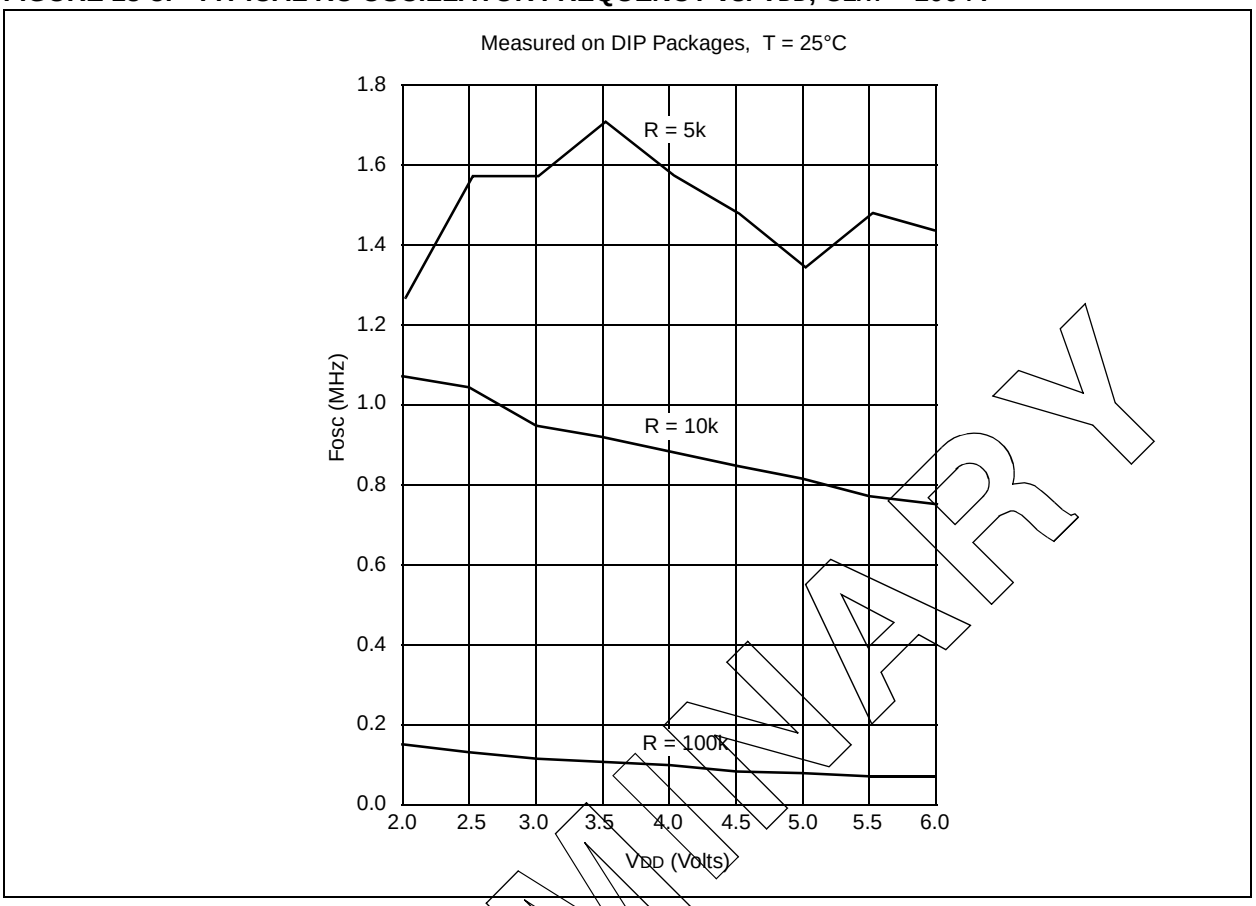

FIGURE 13-4: TYPICAL RC OSCILLATOR FREQUENCY vs. VDD, CEXT = 300 pF

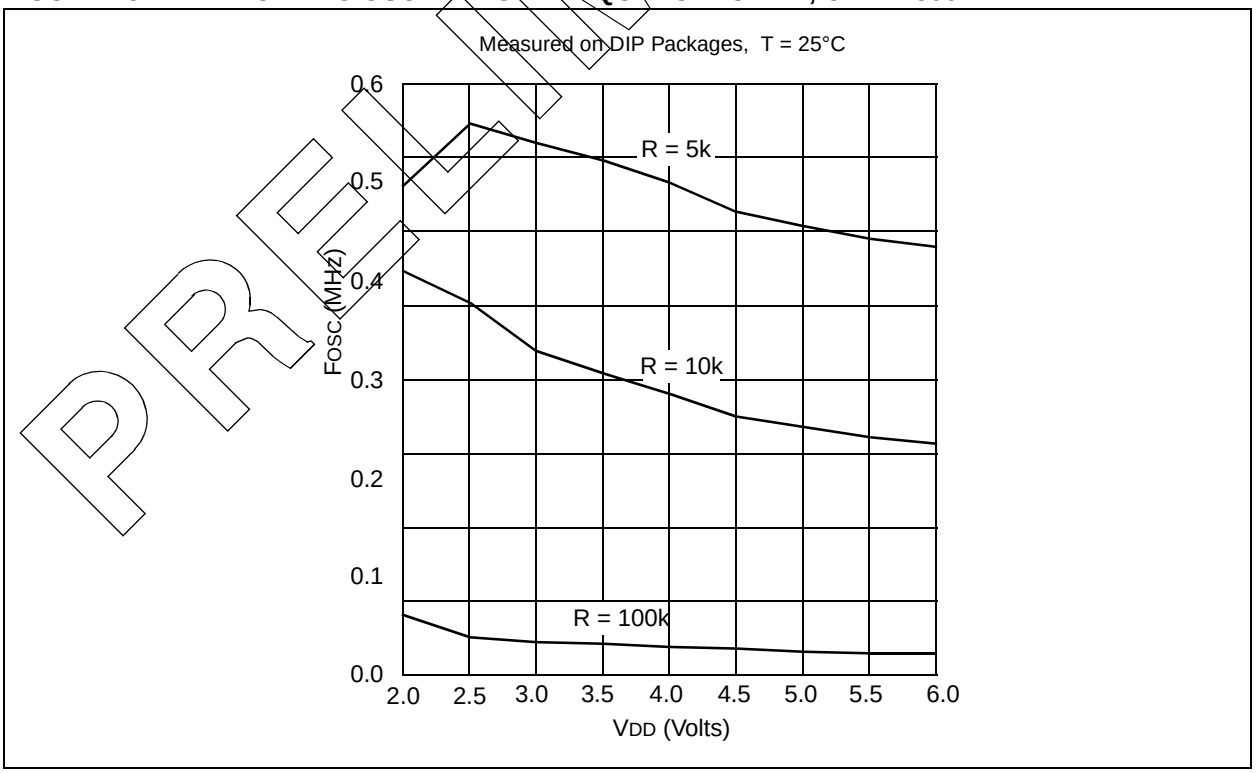

PRELIMINARY

FIGURE 13-5: TYPICAL IPD vs. VDD, WATCHDOG DISABLED

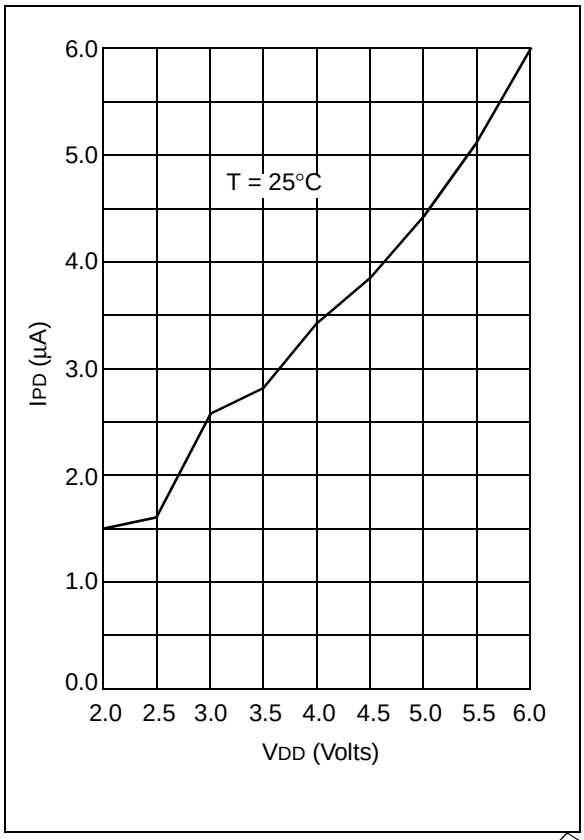

FIGURE 13-6: TYPICAL IPD vs. VDD, WATCHDOG ENABLED

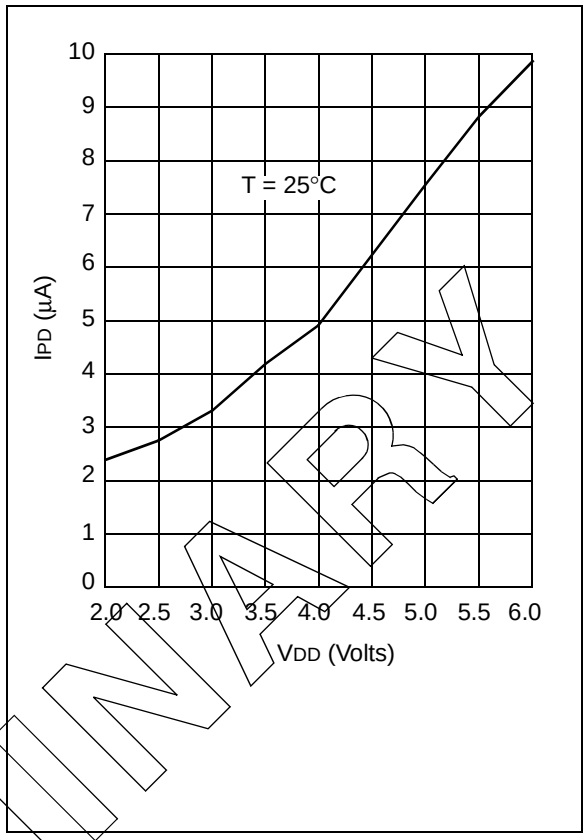

FIGURE 13-7: VTH (INPUT THRESHOLD VOLTAGE) OF I/O PINS vs. VDD

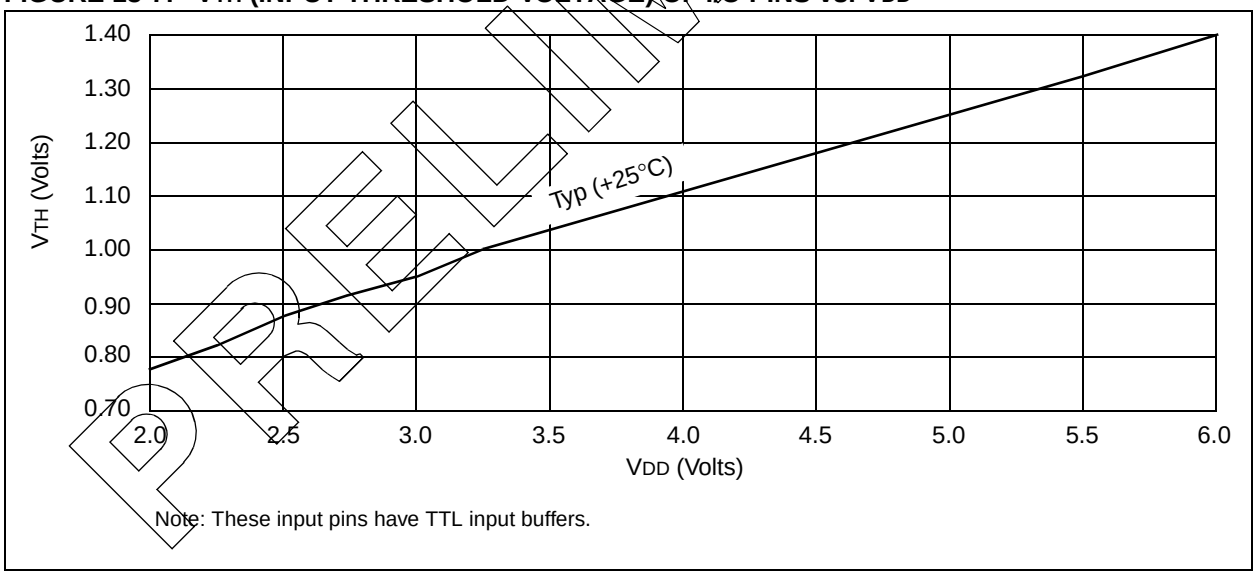

PRELIMINARY

© 1998 Microchip Technology Inc.

FIGURE 13-8: V_{TH} (INPUT THRESHOLD VOLTAGE) OF OSC1 INPUT (IN XT, HS, AND LP MODES) vs. V_{DD}

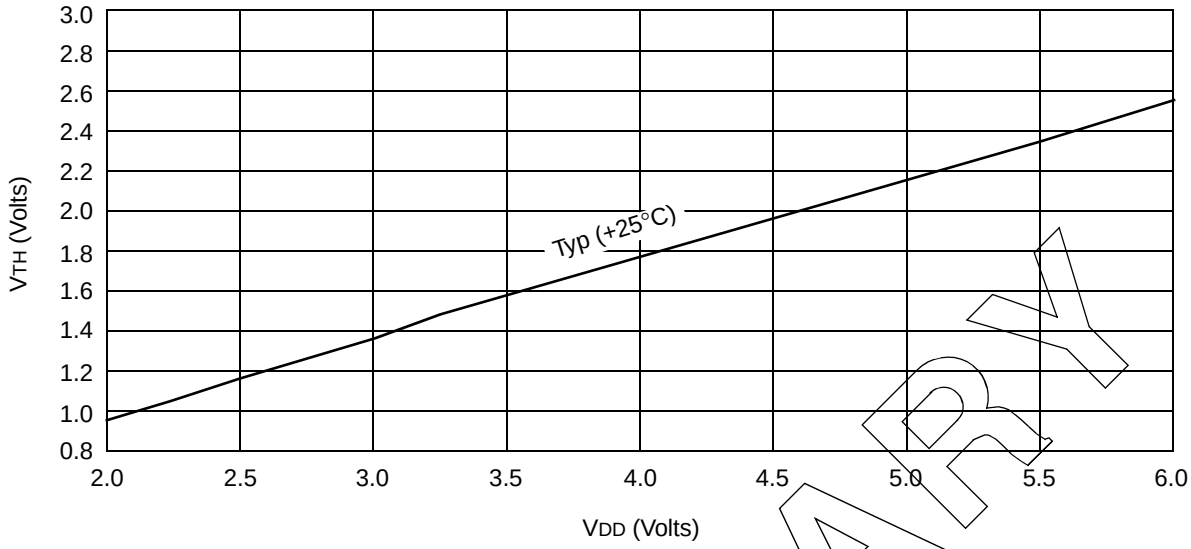

Note: This input pin is CMOS input.

FIGURE 13-9: V_{IH}, V_{IL} OF $\overline{MCLR}$, T0CKI AND OSC1 (IN RC MODE) vs. V_{DD}

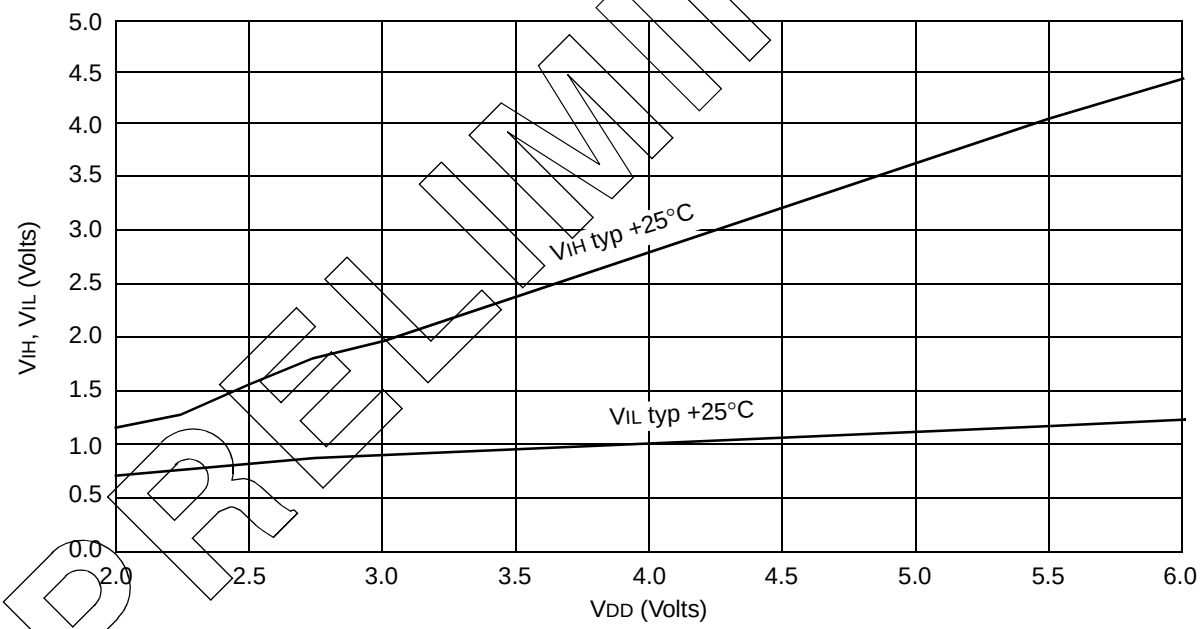

Note: These input pins have Schmitt Trigger input buffers.

PRELIMINARY

FIGURE 13-10: TYPICAL IDD vs. FREQUENCY (RC MODE @20PF, 25°C)

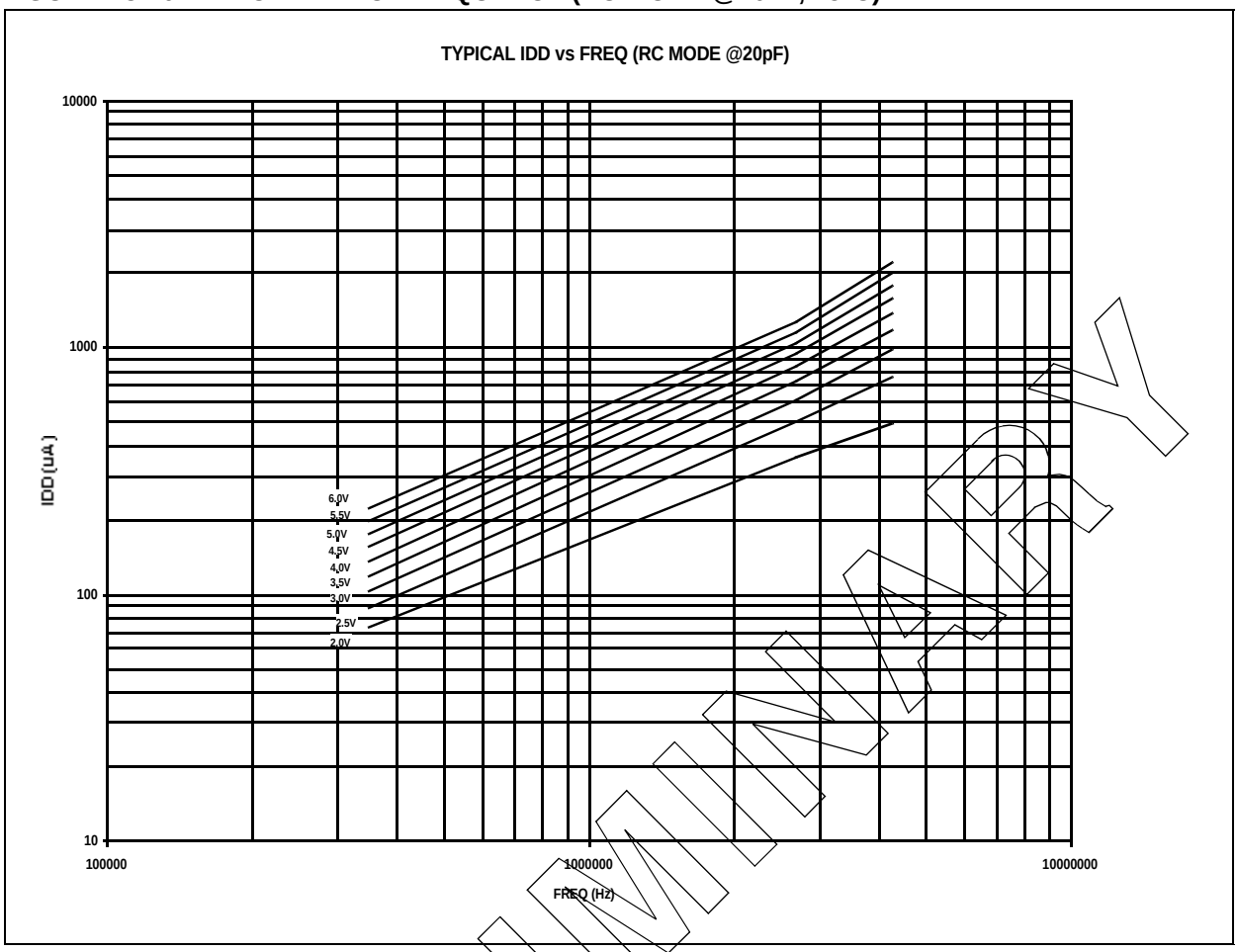

PRELIMINARY

© 1998 Microchip Technology Inc.

FIGURE 13-11: TYPICAL IDD vs. FREQUENCY (RC MODE @100PF, 25°C)

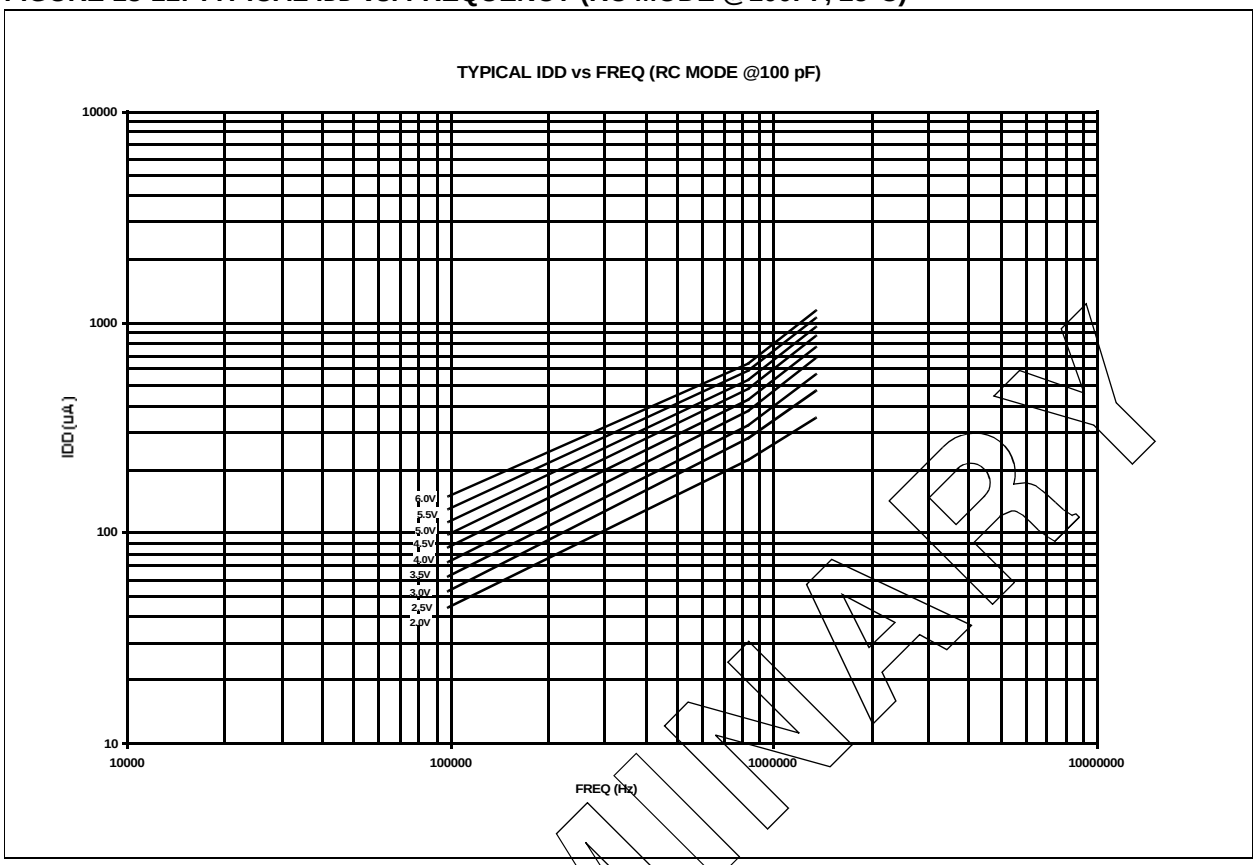

PRELIMINARY

FIGURE 13-12: TYPICAL IDD vs. FREQUENCY (RC MODE @300PF, 25°C)

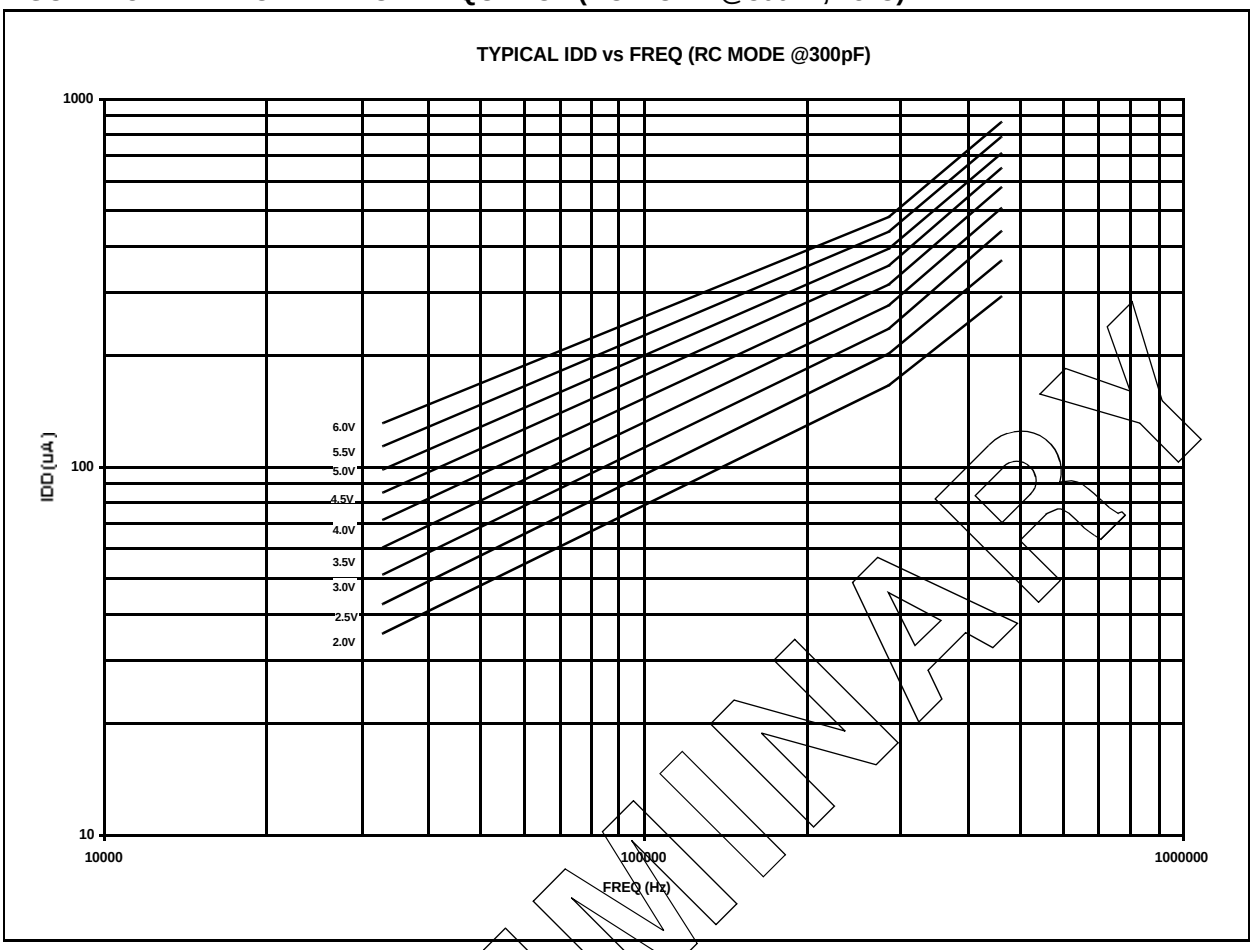

PRELIMINARY

© 1998 Microchip Technology Inc.

FIGURE 13-13: WDT TIMER TIME-OUT PERIOD vs. VDD

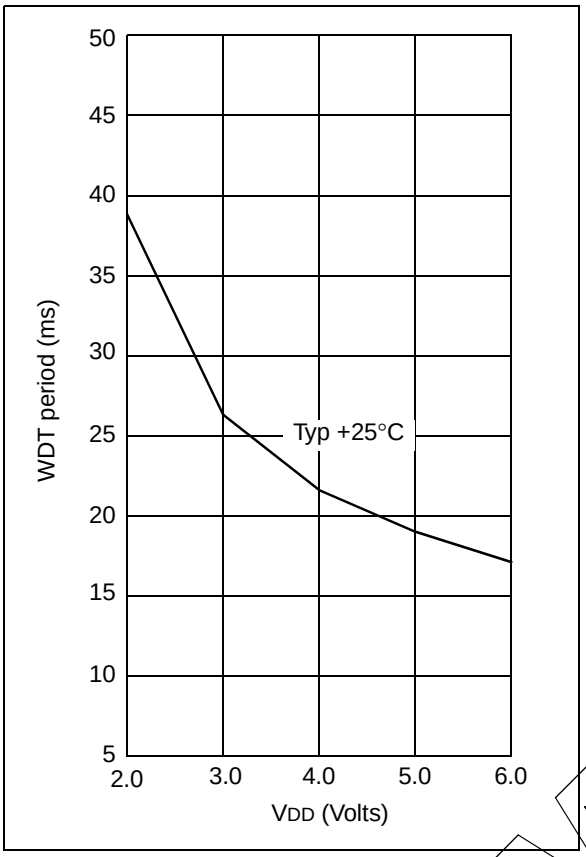

FIGURE 13-14: TRANSCONDUCTANCE (gm) OF HS OSCILLATOR vs. VDD

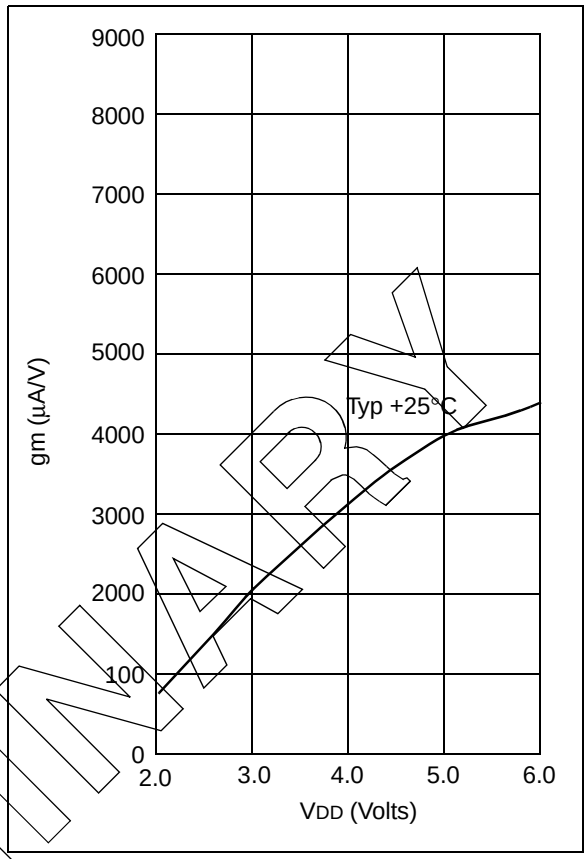

PRELIMINARY

FIGURE 13-15: TRANSCONDUCTANCE (gm) OF LP OSCILLATOR vs. VDD

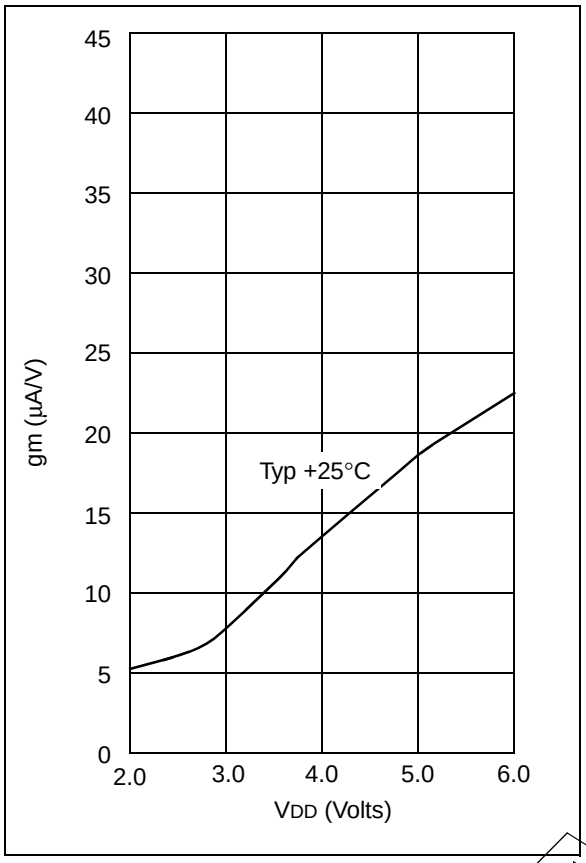

FIGURE 13-16: TRANSCONDUCTANCE (gm) OF XT OSCILLATOR vs. VDD

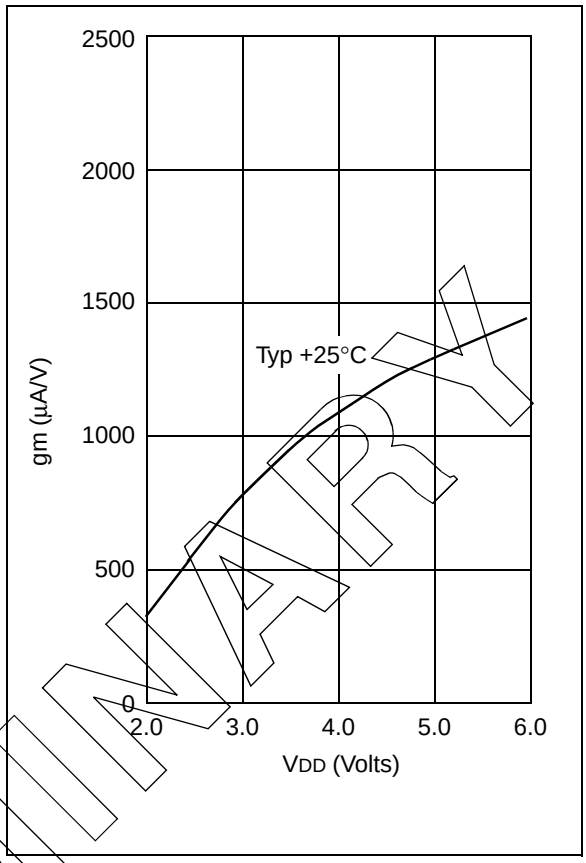

PRELIMINARY

© 1998 Microchip Technology Inc.

FIGURE 13-17: I_{OH} vs. V_{OH}, V_{DD} = 3 V

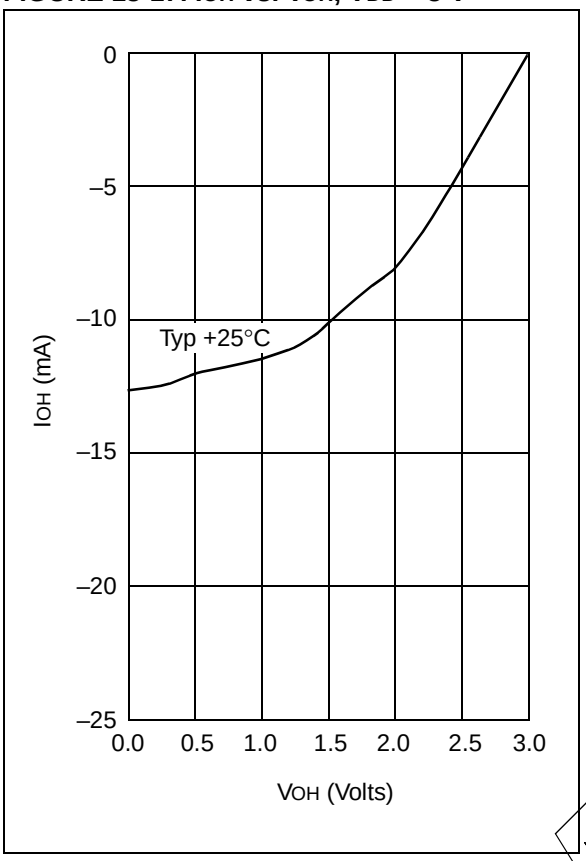

FIGURE 13-18: I_{OH} vs. V_{OH}, V_{DD} = 5 V

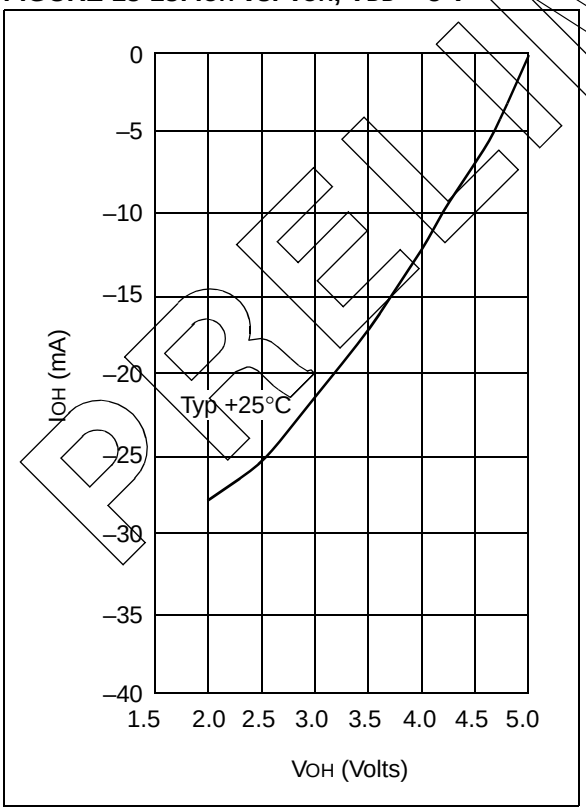

FIGURE 13-19: I_{OL} vs. V_{OL}, V_{DD} = 3 V

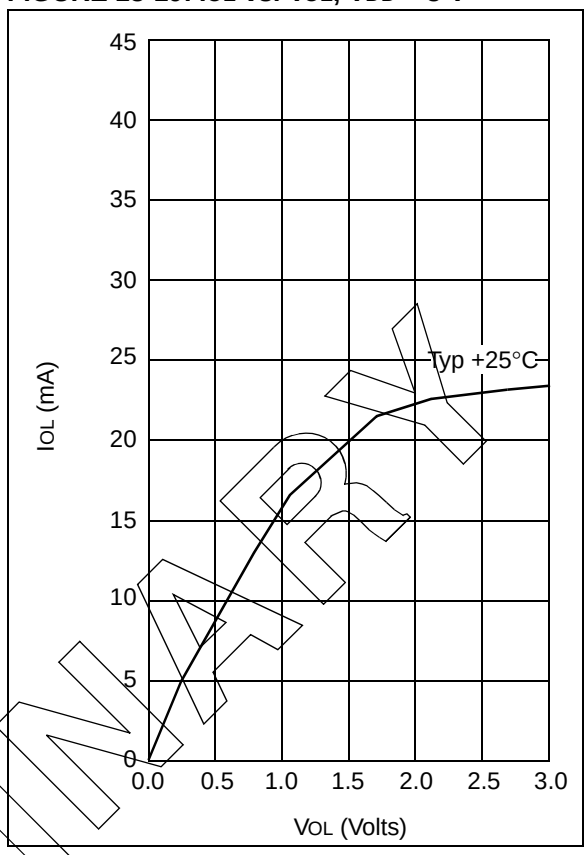

FIGURE 13-20: I_{OL} vs. V_{OL}, V_{DD} = 5 V

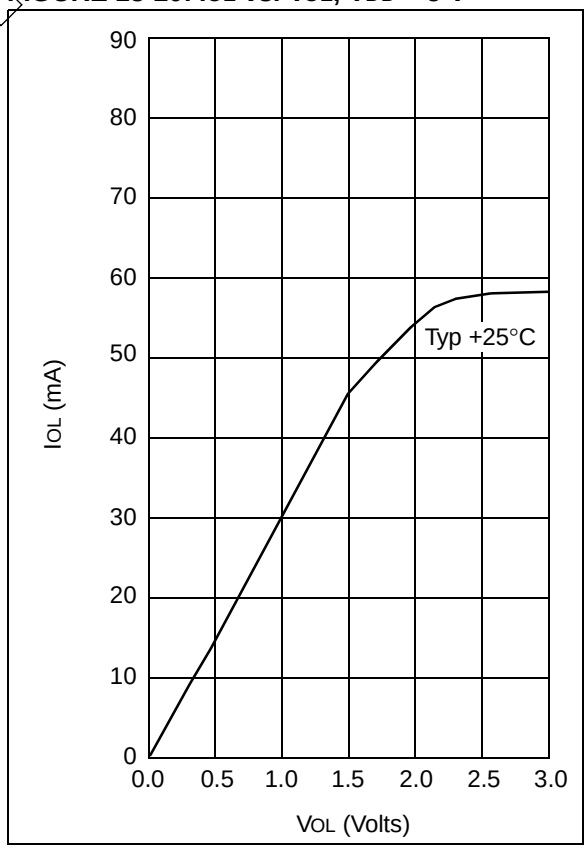

PRELIMINARY

FIGURE 13-21: TYPICAL DATA MEMORY ERASE/WRITE CYCLE TIME VS. VDD

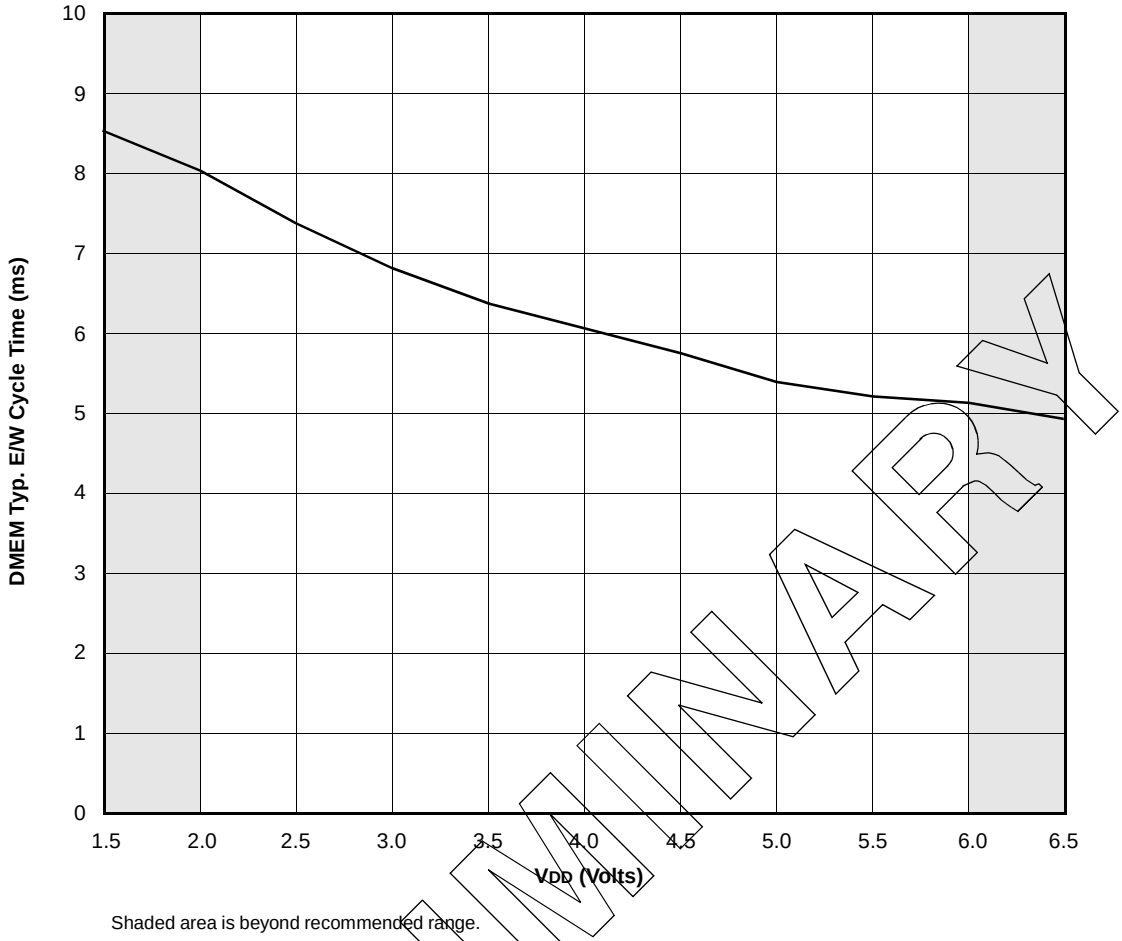

TABLE 13-2 INPUT CAPACITANCE*

Pin Name	Typical Capacitance (pF)	
	18L PDIP	18L SOIC
PORTA	5.0	4.3
PORTB	5.0	4.3
$\overline{MCLR}$	17.0	17.0
OSC1/CLKIN	4.0	3.5
OSC2/CLKOUT	4.3	3.5
T0CKI	3.2	2.8

* All capacitance values are typical at 25°C. A part to part variation of ±25% (three standard deviations) should be taken into account.

PRELIMINARY

© 1998 Microchip Technology Inc.

14.0 PACKAGING INFORMATION

14.1 Package Marking Information

18L PDIP

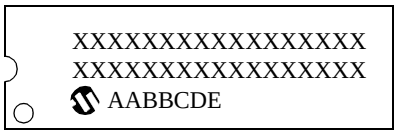

Example

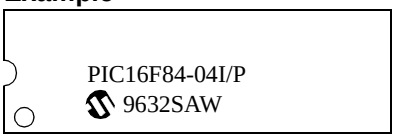

18L SOIC

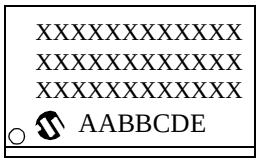

Example

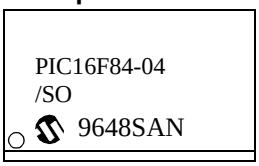

Legend:	XX...X	Microchip part number & customer specific information*
	AA	Year code (last two digits of calendar year)
	BB	Week code (week of January 1 is week ‘01’)
	C	Facility code of the plant at which wafer is manufactured C = Chandler, Arizona, U.S.A., S = Tempe, Arizona, U.S.A.
	D	Mask revision number
	E	Assembly code of the plant or country of origin in which part was assembled
Note:	In the event the full Microchip part number cannot be marked on one line, it will be carried over to the next line, thus limiting the number of available characters for customer specific information.	

***** Standard OTP marking consists of Microchip part number, year code, week code, facility code, mask rev# and assembly code. For OTP marking beyond this, certain price adders apply. Please check with your Microchip Sales Office. For QTP devices, any special marking adders are included in QTP price.

Package Type: K04-007 18-Lead Plastic Dual In-line (P) – 300 mil

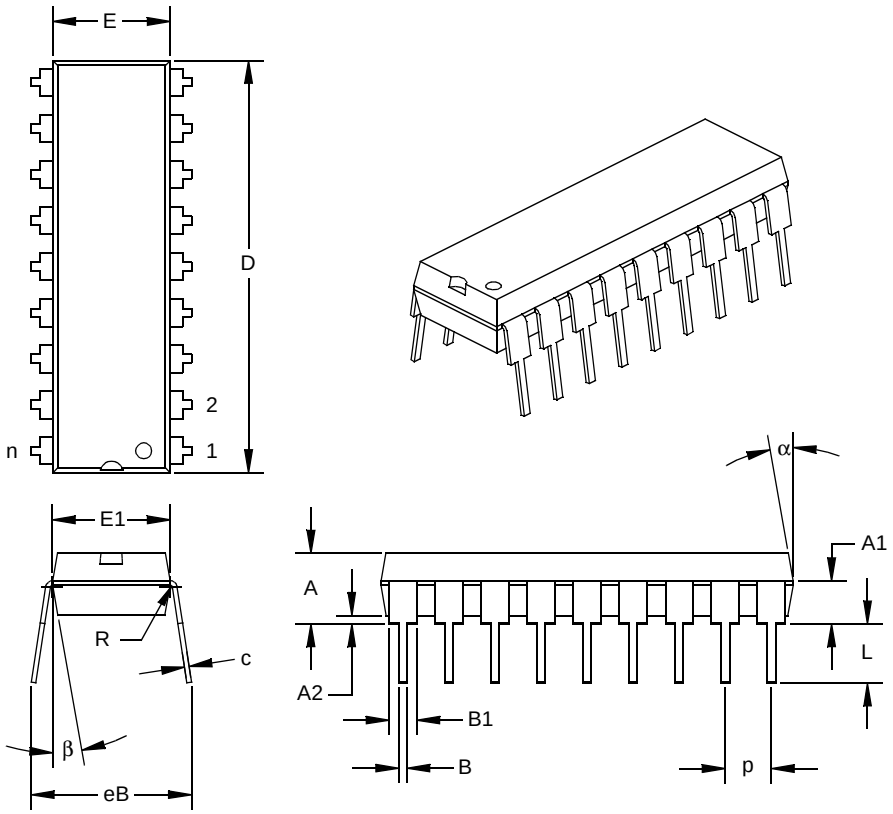

Units		INCHES*			MILLIMETERS		
Dimension Limits		MIN	NOM	MAX	MIN	NOM	MAX
PCB Row Spacing			0.300			7.62	
Number of Pins	n		18			18	
Pitch	p		0.100			2.54	
Lower Lead Width	B	0.013	0.018	0.023	0.33	0.46	0.58
Upper Lead Width	B1†	0.055	0.060	0.065	1.40	1.52	1.65
Shoulder Radius	R	0.000	0.005	0.010	0.00	0.13	0.25
Lead Thickness	c	0.005	0.010	0.015	0.13	0.25	0.38
Top to Seating Plane	A	0.110	0.155	0.155	2.79	3.94	3.94
Top of Lead to Seating Plane	A1	0.075	0.095	0.115	1.91	2.41	2.92
Base to Seating Plane	A2	0.000	0.020	0.020	0.00	0.51	0.51
Tip to Seating Plane	L	0.125	0.130	0.135	3.18	3.30	3.43
Package Length	D‡	0.890	0.895	0.900	22.61	22.73	22.86
Molded Package Width	E‡	0.245	0.255	0.265	6.22	6.48	6.73
Radius to Radius Width	E1	0.230	0.250	0.270	5.84	6.35	6.86
Overall Row Spacing	eB	0.310	0.349	0.387	7.87	8.85	9.83
Mold Draft Angle Top	α	5	10	15	5	10	15
Mold Draft Angle Bottom	β	5	10	15	5	10	15

* Controlling Parameter.

† Dimension “B1” does not include dam-bar protrusions. Dam-bar protrusions shall not exceed 0.003” (0.076 mm) per side or 0.006” (0.152 mm) more than dimension “B1.”

‡ Dimensions “D” and “E” do not include mold flash or protrusions. Mold flash or protrusions shall not exceed 0.010” (0.254 mm) per side or 0.020” (0.508 mm) more than dimensions “D” or “E.”

© 1998 Microchip Technology Inc.

Package Type: K04-051 18-Lead Plastic Small Outline (SO) – Wide, 300 mil

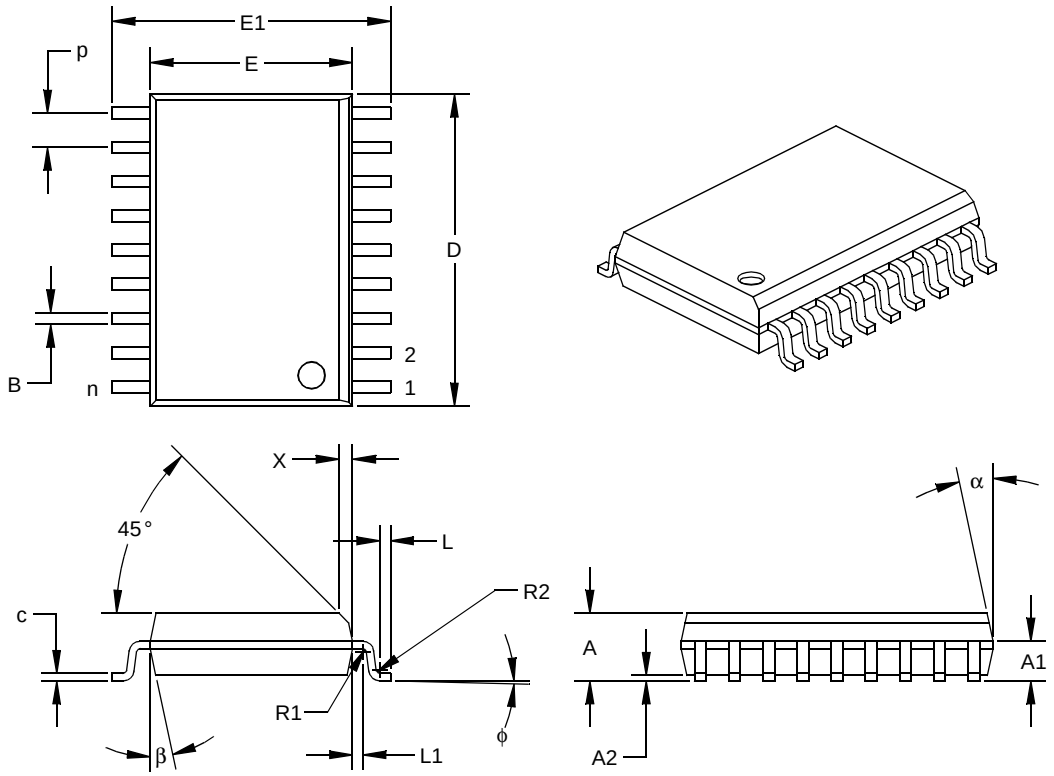

Units		INCHES*			MILLIMETERS		
Dimension Limits		MIN	NOM	MAX	MIN	NOM	MAX
Pitch	p		0.050			1.27	
Number of Pins	n		18			18	
Overall Pack. Height	A	0.093	0.099	0.104	2.36	2.50	2.64
Shoulder Height	A1	0.048	0.058	0.068	1.22	1.47	1.73
Standoff	A2	0.004	0.008	0.011	0.10	0.19	0.28
Molded Package Length	D‡	0.450	0.456	0.462	11.43	11.58	11.73
Molded Package Width	E‡	0.292	0.296	0.299	7.42	7.51	7.59
Outside Dimension	E1	0.394	0.407	0.419	10.01	10.33	10.64
Chamfer Distance	X	0.010	0.020	0.029	0.25	0.50	0.74
Shoulder Radius	R1	0.005	0.005	0.010	0.13	0.13	0.25
Gull Wing Radius	R2	0.005	0.005	0.010	0.13	0.13	0.25
Foot Length	L	0.011	0.016	0.021	0.28	0.41	0.53
Foot Angle	ϕ	0	4	8	0	4	8
Radius Centerline	L1	0.010	0.015	0.020	0.25	0.38	0.51
Lead Thickness	c	0.009	0.011	0.012	0.23	0.27	0.30
Lower Lead Width	B†	0.014	0.017	0.019	0.36	0.42	0.48
Mold Draft Angle Top	α	0	12	15	0	12	15
Mold Draft Angle Bottom	β	0	12	15	0	12	15

* Controlling Parameter.

† Dimension “B” does not include dam-bar protrusions. Dam-bar protrusions shall not exceed 0.003” (0.076 mm) per side or 0.006” (0.152 mm) more than dimension “B.”

‡ Dimensions “D” and “E” do not include mold flash or protrusions. Mold flash or protrusions shall not exceed 0.010” (0.254 mm) per side or 0.020” (0.508 mm) more than dimensions “D” or “E.”

© 1998 Microchip Technology Inc.

NOTES:

© 1998 Microchip Technology Inc.

APPENDIX A: FEATURE IMPROVEMENTS - FROM PIC16C5X TO PIC16F8X

The following is the list of feature improvements over the PIC16C5X microcontroller family:

1. Instruction word length is increased to 14 bits. This allows larger page sizes both in program memory (2K now as opposed to 512 before) and the register file (128 bytes now versus 32 bytes before).
2. A PC latch register (PCLATH) is added to handle program memory paging. PA2, PA1 and PA0 bits are removed from the status register and placed in the option register.
3. Data memory paging is redefined slightly. The STATUS register is modified.
4. Four new instructions have been added: `RETURN`, `RETFIE`, `ADDLW`, and `SUBLW`. Two instructions, `TRIS` and `OPTION`, are being phased out although they are kept for compatibility with PIC16C5X.
5. OPTION and TRIS registers are made addressable.
6. Interrupt capability is added. Interrupt vector is at 0004h.
7. Stack size is increased to 8 deep.
8. Reset vector is changed to 0000h.
9. Reset of all registers is revisited. Five different reset (and wake-up) types are recognized. Registers are reset differently.
10. Wake up from SLEEP through interrupt is added.
11. Two separate timers, the Oscillator Start-up Timer (OST) and Power-up Timer (PWRT), are included for more reliable power-up. These timers are invoked selectively to avoid unnecessary delays on power-up and wake-up.
12. PORTB has weak pull-ups and interrupt on change features.
13. T0CKI pin is also a port pin (RA4/T0CKI).
14. FSR is a full 8-bit register.
15. "In system programming" is made possible. The user can program PIC16CXX devices using only five pins: V_{DD}, V_{SS}, V_{PP}, RB6 (clock) and RB7 (data in/out).

APPENDIX B: CODE COMPATIBILITY - FROM PIC16C5X TO PIC16F8X

To convert code written for PIC16C5X to PIC16F8X, the user should take the following steps:

1. Remove any program memory page select operations (PA2, PA1, PA0 bits) for `CALL`, `GOTO`.
2. Revisit any computed jump operations (write to PC or add to PC, etc.) to make sure page bits are set properly under the new scheme.
3. Eliminate any data memory page switching. Redefine data variables for reallocation.
4. Verify all writes to STATUS, OPTION, and FSR registers since these have changed.
5. Change reset vector to 0000h.

© 1998 Microchip Technology Inc.

APPENDIX C: WHAT'S NEW IN THIS DATA SHEET

Here's what's new in this data sheet:

1. DC & AC Characteristics Graphs/Tables section for PIC16F8X devices has been added.
2. An appendix on conversion considerations has been added. This explains differences for customers wanting to go from PIC16C84 to PIC16F84 or similar device.

APPENDIX D: WHAT'S CHANGED IN THIS DATA SHEET

Here's what's changed in this data sheet:

1. Errata information has been included.
2. Option register name has been changed from OPTION to OPTION_REG. This is consistant with other data sheets and header files, and resolves the conflict between the OPTION command and OPTION register.
3. Errors have been fixed.
4. The appendix containing PIC16/17 microcontrollers has been removed.

© 1998 Microchip Technology Inc.

APPENDIX E: CONVERSION CONSIDERATIONS - PIC16C84 TO PIC16F83/F84 AND PIC16CR83/CR84

Considerations for converting from the PIC16C84 to the PIC16F84 are listed in the table below. These considerations apply to converting from the PIC16C84 to the PIC16F83 (same as PIC16F84 except for program and data RAM memory sizes) and the PIC16CR84 and PIC16CR83 (ROM versions of Flash devices). Development Systems support is available for all of the PIC16X8X devices.

Difference	PIC16C84	PIC16F84
The polarity of the PWRTE bit has been reversed. Ensure that the programmer has this bit correctly set before programming.	PWRTE	$\overline{\text{PWRTE}}$
The PIC16F84 (and PIC16CR84) have larger RAM sizes. Ensure that this does not cause an issue with your program.	RAM = 36 bytes	RAM = 68 bytes
The $\overline{\text{MCLR}}$ pin now has an on-chip filter. The input signal on the $\overline{\text{MCLR}}$ pin will require a longer low pulse to generate an interrupt.	$\overline{\text{MCLR}}$ pulse width (low) = 350ns; 2.0V ≤ VDD ≤ 3.0V = 150ns; 3.0V ≤ VDD ≤ 6.0V	$\overline{\text{MCLR}}$ pulse width (low) = 1000ns; 2.0V ≤ VDD ≤ 6.0V
Some electrical specifications have been improved (see IPD example). Compare the electrical specifications of the two devices to ensure that this will not cause a compatibility issue.	IPD (typ @ 2V) = 26µA IPD (max @ 4V, WDT disabled) =100µA (PIC16C84) =100µA (PIC16LC84)	IPD (typ @ 2V) < 1µA IPD (max @ 4V, WDT disabled) =14µA (PIC16F84) =7µA (PIC16LF84)
PORTA and crystal oscillator values less than 500kHz	For crystal oscillator configurations operating below 500kHz, the device may generate a spurious internal Q-clock when PORTA<0> switches state.	N/A
RB0/INT pin	TTL	TTL/ST* (* This buffer is a Schmitt Trigger input when configured as the external interrupt.)
EEADR<7:6> and IDD	It is recommended that the EEADR<7:6> bits be cleared. When either of these bits is set, the maximum IDD for the device is higher than when both are cleared.	N/A
Code Protect	1 CP bit	9 CP bits
Recommended value of REXT for RC oscillator circuits	REXT = 3kΩ - 100kΩ	REXT = 5kΩ - 100kΩ
GIE bit unintentional enable	If an interrupt occurs while the Global Interrupt Enable (GIE) bit is being cleared, the GIE bit may unintentionally be re-enabled by the user's Interrupt Service Routine (the `RETFIE` instruction).	N/A

NOTES:

© 1998 Microchip Technology Inc.

INDEX

Numerics

8.1 Configuration Bits 37

A

Absolute Maximum Ratings 73, 85
ALU 7
Architectural Overview 7
Assembler
    MPASM Assembler 70

B

Block Diagram
    Interrupt Logic 47
    On-Chip Reset Circuit 41
    RA3:RA0 and RA5 Port Pins 21
    RA4 Pin 21
    RB7:RB4 Port Pins 23
    TMR0/WDT Prescaler 30
    Watchdog Timer 50
Brown-out Protection Circuit 46

C

Carry 7
CLKIN 9
CLKOUT 9
Code Protection 37, 52
Compatibility, upward 3
Computed GOTO 18
Configuration Bits 37

D

DC Characteristics 75, 76, 77, 78, 87, 88, 89, 90
Development Support 69
Development Tools 69
Digit Carry 7

E

Electrical Characteristics 73, 85
External Power-on Reset Circuit 43

F

Family of Devices
    PIC16C8X 3
FSR 19, 42
Fuzzy Logic Dev. System (*fuzzy*TECH®-MP) 71

G

GIE 47

I

I/O Ports 21
I/O Programming Considerations 25
ICEPIC Low-Cost PIC16CXXX In-Circuit Emulator 69
In-Circuit Serial Programming 37, 52
INDF 42
Instruction Format 53
Instruction Set
    ADDLW 55
    ADDWF 55
    ANDLW 55
    ANDWF 55
    BCF 56
    BSF 56
    BTFSC 56
    BTFSS 57
    CALL 57
    CLRF 58
    CLRW 58
    CLRWDT 58
    COMF 59
    DECF 59
    DECFSZ 59
    GOTO 60
    INCF 60
    INCFSZ 61
    IORLW 61
    IORWF 62
    MOVF 62
    MOVLW 62
    MOVWF 62
    NOP 63
    OPTION 63
    RETFIE 63
    RETLW 64
    RETURN 64
    RLF 65
    RRF 65
    SLEEP 66
    SUBLW 66
    SUBWF 67
    SWAPF 67
    TRIS 67
    XORLW 68
    XORWF 68
    Section 53
    Summary Table 54
INT Interrupt 48
INTCON 17, 42, 47, 48
INTEDG 48
Interrupts
    Flag 47
    Interrupt on Change Feature 23
    Interrupts 37, 47

K

KeeLoq® Evaluation and Programming Tools 71

L

Loading of PC 18

M

$\overline{\text{MCLR}}$ 9, 41, 42
Memory Organization
    Data Memory 12
    Memory Organization 11
    Program Memory 11
MP-DriveWay™ - Application Code Generator 71
MPLAB C 71
MPLAB Integrated Development Environment Software ... 70

O

OPCODE 53
OPTION 16, 42, 48
OSC selection 37
OSC1 9
OSC2 9
Oscillator
    HS 39, 46
    LP 39, 46
    RC 39, 40
    XT 39
Oscillator Configurations 39

© 1998 Microchip Technology Inc.

P

Paging, Program Memory 18
PCL 18, 42
PCLATH 18, 42
$\overline{PD}$ 15, 41, 46
PICDEM-1 Low-Cost PICmicro Demo Board 70
PICDEM-2 Low-Cost PIC16CXX Demo Board 70
PICDEM-3 Low-Cost PIC16CXXX Demo Board 70
PICMASTER® In-Circuit Emulator 69
PICSTART® Plus Entry Level Development System 69
Pinout Descriptions 9
POR 43
    Oscillator Start-up Timer (OST) 37, 43
    Power-on Reset (POR) 37, 42, 43
    Power-up Timer (PWRT) 37, 43
    Time-out Sequence 46
    Time-out Sequence on Power-up 44
    $\overline{TO}$ 15, 41, 46
Port RB Interrupt 48
PORTA 9, 21, 42
PORTB 9, 23, 42
Power-down Mode (SLEEP) 51
Prescaler 29
PRO MATE® II Universal Programmer 69
Product Identification System 121

R

RBIF bit 23, 48
RC Oscillator 46
Read-Modify-Write 25
Register File 12
Reset 37, 41
Reset on Brown-Out 46

S

Saving W Register and STATUS in RAM 49
SEEVAL® Evaluation and Programming System 71
SLEEP 37, 41, 51
Software Simulator (MPLAB-SIM) 71
Special Features of the CPU 37
Special Function Registers 12
Stack 18
    Overflows 18
    Underflows 18
STATUS 7, 15, 42

T

time-out 42
Timer0
    Switching Prescaler Assignment 31
    T0IF 48
    Timer0 Module 27
    TMR0 Interrupt 48
    TMR0 with External Clock 29
Timing Diagrams
    Time-out Sequence 44
Timing Diagrams and Specifications 80, 92
TRISA 21
TRISB 23, 42

W

W 42
Wake-up from SLEEP 42, 51
Watchdog Timer (WDT) 37, 41, 42, 50
WDT 42
    Period 50
    Programming Considerations 50
    Time-out 42

X

XT 46

Z

Zero bit 7

© 1998 Microchip Technology Inc.

ON-LINE SUPPORT

Microchip provides on-line support on the Microchip World Wide Web (WWW) site.

The web site is used by Microchip as a means to make files and information easily available to customers. To view the site, the user must have access to the Internet and a web browser, such as Netscape or Microsoft Explorer. Files are also available for FTP download from our FTP site.

Connecting to the Microchip Internet Web Site

The Microchip web site is available by using your favorite Internet browser to attach to:

www.microchip.com

The file transfer site is available by using an FTP service to connect to:

ftp://ftp.futureone.com/pub/microchip

The web site and file transfer site provide a variety of services. Users may download files for the latest Development Tools, Data Sheets, Application Notes, User's Guides, Articles and Sample Programs. A variety of Microchip specific business information is also available, including listings of Microchip sales offices, distributors and factory representatives. Other data available for consideration is:

- Latest Microchip Press Releases
- Technical Support Section with Frequently Asked Questions
- Design Tips
- Device Errata
- Job Postings
- Microchip Consultant Program Member Listing
- Links to other useful web sites related to Microchip Products
- Conferences for products, Development Systems, technical information and more
- Listing of seminars and events

Systems Information and Upgrade Hot Line

The Systems Information and Upgrade Line provides system users a listing of the latest versions of all of Microchip's development systems software products. Plus, this line provides information on how customers can receive any currently available upgrade kits.The Hot Line Numbers are:

1-800-755-2345 for U.S. and most of Canada, and

1-602-786-7302 for the rest of the world.

980106

Trademarks: The Microchip name, logo, PIC, PICSTART, PICMASTER and PRO MATE are registered trademarks of Microchip Technology Incorporated in the U.S.A. and other countries. PICmicro, *Flex*ROM, MPLAB and *fuzzy*LAB are trademarks and SQTP is a service mark of Microchip in the U.S.A.

*fuzzy*TECH is a registered trademark of Inform Software Corporation. IBM, IBM PC-AT are registered trademarks of International Business Machines Corp. Pentium is a trademark of Intel Corporation. Windows is a trademark and MS-DOS, Microsoft Windows are registered trademarks of Microsoft Corporation. CompuServe is a registered trademark of CompuServe Incorporated.

All other trademarks mentioned herein are the property of their respective companies.

READER RESPONSE

It is our intention to provide you with the best documentation possible to ensure successful use of your Microchip product. If you wish to provide your comments on organization, clarity, subject matter, and ways in which our documentation can better serve you, please FAX your comments to the Technical Publications Manager at (602) 786-7578.

Please list the following information, and use this outline to provide us with your comments about this Data Sheet.

To: Technical Publications Manager Total Pages Sent

RE: Reader Response

From: Name _____

Company _____

Address _____

City / State / ZIP / Country _____

Telephone: (_____) _____ - _____ FAX: (_____) _____ - _____

Application (optional):

Would you like a reply? ___Y ___N

Device: **PIC16F8X** Literature Number: **DS30430C**

Questions:

1. What are the best features of this document?

_____

_____

2. How does this document meet your hardware and software development needs?

_____

_____

3. Do you find the organization of this data sheet easy to follow? If not, why?

_____

_____

4. What additions to the data sheet do you think would enhance the structure and subject?

_____

_____

5. What deletions from the data sheet could be made without affecting the overall usefulness?

_____

_____

6. Is there any incorrect or misleading information (what and where)?

_____

_____

7. How would you improve this document?

_____

_____

8. How would you improve our software, systems, and silicon products?

_____

_____

© 1998 Microchip Technology Inc.

PIC16F8X PRODUCT IDENTIFICATION SYSTEM

To order or obtain information, e.g., on pricing or delivery, refer to the factory or the listed sales office.

PART NO.	-XX	X	/XX	XXX
Device	Frequency Range	Temperature Range	Package	Pattern

Device	PIC16F8X(2), PIC16F8XT(3) PIC16LF8X(2), PIC16LF8XT(3) PIC16F8XA(2), PIC16F8XAT(3) PIC16LF8XA(2), PIC16LF8XAT(3) PIC16CR8X(2), PIC16CR8XT(3) PIC16LCR8X(2), PIC16LCR8XT(3)		
Frequency Range	04	= 4 MHz	
	10	= 10 MHz	
	20	= 20 MHz	
Temperature Range	b(1)	= 0°C to +70°C	(Commercial)
	I	= -40°C to +85°C	(Industrial)
Package	P	= PDIP	
	SO	= SOIC (Gull Wing, 300 mil body)	
	SS	= SSOP	
Pattern	3-digit Pattern Code for QTP, ROM (blank otherwise)		

Examples:

a) PIC16F84 -04/P 301 = Commercial temp., PDIP package, 4 MHz, normal VDD limits, QTP pattern #301.

b) PIC16LF84 - 04I/SO = Industrial temp., SOIC package, 200 kHz, Extended VDD limits.

c) PIC16CR84 - 10I/P = ROM program memory, Industrial temp., PDIP package, 10MHz, normal VDD limits.

Note 1: b = blank
2: F = Standard VDD range
LF = Extended VDD range
CR = ROM Version, Standard VDD range
LCR = ROM Version, Extended VDD range
3: T = in tape and reel - SOIC, SSOP packages only.

SALES AND SUPPORT

Products supported by a preliminary Data Sheet may possibly have an errata sheet describing minor operational differences and recommended workarounds. To determine if an errata sheet exists for a particular device, please contact one of the following:

1. Your local Microchip sales office.
2. The Microchip Corporate Literature Center U.S. FAX: (602) 786-7277
3. The Microchip's Bulletin Board, via your local CompuServe number (CompuServe membership NOT required).

Please specify which device, revision of silicon and Data Sheet (include Literature #) you are using.

For latest version information and upgrade kits for Microchip Development Tools, please call 1-800-755-2345 or 1-602-786-7302.

Note the following details of the code protection feature on PICmicro® MCUs.

- The PICmicro family meets the specifications contained in the Microchip Data Sheet.
- Microchip believes that its family of PICmicro microcontrollers is one of the most secure products of its kind on the market today, when used in the intended manner and under normal conditions.
- There are dishonest and possibly illegal methods used to breach the code protection feature. All of these methods, to our knowledge, require using the PICmicro microcontroller in a manner outside the operating specifications contained in the data sheet. The person doing so may be engaged in theft of intellectual property.
- Microchip is willing to work with the customer who is concerned about the integrity of their code.
- Neither Microchip nor any other semiconductor manufacturer can guarantee the security of their code. Code protection does not mean that we are guaranteeing the product as “unbreakable”.
- Code protection is constantly evolving. We at Microchip are committed to continuously improving the code protection features of our product.

If you have any further questions about this matter, please contact the local sales office nearest to you.

Information contained in this publication regarding device applications and the like is intended through suggestion only and may be superseded by updates. It is your responsibility to ensure that your application meets with your specifications. No representation or warranty is given and no liability is assumed by Microchip Technology Incorporated with respect to the accuracy or use of such information, or infringement of patents or other intellectual property rights arising from such use or otherwise. Use of Microchip’s products as critical components in life support systems is not authorized except with express written approval by Microchip. No licenses are conveyed, implicitly or otherwise, under any intellectual property rights.

Trademarks

The Microchip name and logo, the Microchip logo, FilterLab, KEELOQ, microID, MPLAB, PIC, PICmicro, PICMASTER, PICSTART, PRO MATE, SEEVAL and The Embedded Control Solutions Company are registered trademarks of Microchip Technology Incorporated in the U.S.A. and other countries.

dsPIC, ECONOMONITOR, FanSense, FlexROM, fuzzyLAB, In-Circuit Serial Programming, ICSP, ICEPIC, microPort, Migratable Memory, MPASM, MPLIB, MPLINK, MPSIM, MXDEV, PICC, PICDEM, PICDEM.net, rfPIC, Select Mode and Total Endurance are trademarks of Microchip Technology Incorporated in the U.S.A.

Serialized Quick Turn Programming (SQTP) is a service mark of Microchip Technology Incorporated in the U.S.A.

All other trademarks mentioned herein are property of their respective companies.

© 2002, Microchip Technology Incorporated, Printed in the U.S.A., All Rights Reserved.

Printed on recycled paper.

DNV Certification, Inc. USA
ANSI • RAB QMS ACCREDITED
DNV MSC The Netherlands Accredited by the RvA
DNV
ISO 9001 / QS-9000 REGISTERED FIRM

Microchip received QS-9000 quality system certification for its worldwide headquarters, design and wafer fabrication facilities in Chandler and Tempe, Arizona in July 1999. The Company’s quality system processes and procedures are QS-9000 compliant for its PICmicro® 8-bit MCUs, KEELOQ® code hopping devices, Serial EEPROMs and microperipheral products. In addition, Microchip’s quality system for the design and manufacture of development systems is ISO 9001 certified.

WORLDWIDE SALES AND SERVICE

AMERICAS

Corporate Office
2355 West Chandler Blvd.
Chandler, AZ 85224-6199
Tel: 480-792-7200 Fax: 480-792-7277
Technical Support: 480-792-7627
Web Address: http://www.microchip.com

Rocky Mountain
2355 West Chandler Blvd.
Chandler, AZ 85224-6199
Tel: 480-792-7966 Fax: 480-792-7456

Atlanta
500 Sugar Mill Road, Suite 200B
Atlanta, GA 30350
Tel: 770-640-0034 Fax: 770-640-0307

Boston
2 Lan Drive, Suite 120
Westford, MA 01886
Tel: 978-692-3848 Fax: 978-692-3821

Chicago
333 Pierce Road, Suite 180
Itasca, IL 60143
Tel: 630-285-0071 Fax: 630-285-0075

Dallas
4570 Westgrove Drive, Suite 160
Addison, TX 75001
Tel: 972-818-7423 Fax: 972-818-2924

Detroit
Tri-Atria Office Building
32255 Northwestern Highway, Suite 190
Farmington Hills, MI 48334
Tel: 248-538-2250 Fax: 248-538-2260

Kokomo
2767 S. Albright Road
Kokomo, Indiana 46902
Tel: 765-864-8360 Fax: 765-864-8387

Los Angeles
18201 Von Karman, Suite 1090
Irvine, CA 92612
Tel: 949-263-1888 Fax: 949-263-1338

New York
150 Motor Parkway, Suite 202
Hauppauge, NY 11788
Tel: 631-273-5305 Fax: 631-273-5335

San Jose
Microchip Technology Inc.
2107 North First Street, Suite 590
San Jose, CA 95131
Tel: 408-436-7950 Fax: 408-436-7955

Toronto
6285 Northam Drive, Suite 108
Mississauga, Ontario L4V 1X5, Canada
Tel: 905-673-0699 Fax: 905-673-6509

ASIA/PACIFIC

Australia
Microchip Technology Australia Pty Ltd
Suite 22, 41 Rawson Street
Epping 2121, NSW
Australia
Tel: 61-2-9868-6733 Fax: 61-2-9868-6755

China - Beijing
Microchip Technology Consulting (Shanghai) Co., Ltd., Beijing Liaison Office
Unit 915
Bei Hai Wan Tai Bldg.
No. 6 Chaoyangmen Beidajie
Beijing, 100027, No. China
Tel: 86-10-85282100 Fax: 86-10-85282104

China - Chengdu
Microchip Technology Consulting (Shanghai) Co., Ltd., Chengdu Liaison Office
Rm. 2401, 24th Floor,
Ming Xing Financial Tower
No. 88 TIDU Street
Chengdu 610016, China
Tel: 86-28-6766200 Fax: 86-28-6766599

China - Fuzhou
Microchip Technology Consulting (Shanghai) Co., Ltd., Fuzhou Liaison Office
Unit 28F, World Trade Plaza
No. 71 Wusi Road
Fuzhou 350001, China
Tel: 86-591-7503506 Fax: 86-591-7503521

China - Shanghai
Microchip Technology Consulting (Shanghai) Co., Ltd.
Room 701, Bldg. B
Far East International Plaza
No. 317 Xian Xia Road
Shanghai, 200051
Tel: 86-21-6275-5700 Fax: 86-21-6275-5060

China - Shenzhen
Microchip Technology Consulting (Shanghai) Co., Ltd., Shenzhen Liaison Office
Rm. 1315, 13/F, Shenzhen Kerry Centre,
Renminnan Lu
Shenzhen 518001, China
Tel: 86-755-2350361 Fax: 86-755-2366086

Hong Kong
Microchip Technology Hongkong Ltd.
Unit 901-6, Tower 2, Metroplaza
223 Hing Fong Road
Kwai Fong, N.T., Hong Kong
Tel: 852-2401-1200 Fax: 852-2401-3431

India
Microchip Technology Inc.
India Liaison Office
Divyasree Chambers
1 Floor, Wing A (A3/A4)
No. 11, O'Shaugnessey Road
Bangalore, 560 025, India
Tel: 91-80-2290061 Fax: 91-80-2290062

Japan
Microchip Technology Japan K.K.
Benex S-1 6F
3-18-20, Shinyokohama
Kohoku-Ku, Yokohama-shi
Kanagawa, 222-0033, Japan
Tel: 81-45-471- 6166 Fax: 81-45-471-6122

Korea
Microchip Technology Korea
168-1, Youngbo Bldg. 3 Floor
Samsung-Dong, Kangnam-Ku
Seoul, Korea 135-882
Tel: 82-2-554-7200 Fax: 82-2-558-5934

Singapore
Microchip Technology Singapore Pte Ltd.
200 Middle Road
#07-02 Prime Centre
Singapore, 188980
Tel: 65-334-8870 Fax: 65-334-8850

Taiwan
Microchip Technology Taiwan
11F-3, No. 207
Tung Hua North Road
Taipei, 105, Taiwan
Tel: 886-2-2717-7175 Fax: 886-2-2545-0139

EUROPE

Denmark
Microchip Technology Nordic ApS
Regus Business Centre
Lautrup hoj 1-3
Ballerup DK-2750 Denmark
Tel: 45 4420 9895 Fax: 45 4420 9910

France
Microchip Technology SARL
Parc d'Activite du Moulin de Massy
43 Rue du Saule Trapu
Batiment A - ler Etage
91300 Massy, France
Tel: 33-1-69-53-63-20 Fax: 33-1-69-30-90-79

Germany
Microchip Technology GmbH
Gustav-Heinemann Ring 125
D-81739 Munich, Germany
Tel: 49-89-627-144 0 Fax: 49-89-627-144-44

Italy
Microchip Technology SRL
Centro Direzionale Colleoni
Palazzo Taurus 1 V. Le Colleoni 1
20041 Agrate Brianza
Milan, Italy
Tel: 39-039-65791-1 Fax: 39-039-6899883

United Kingdom
Arizona Microchip Technology Ltd.
505 Eskdale Road
Winnersh Triangle
Wokingham
Berkshire, England RG41 5TU
Tel: 44 118 921 5869 Fax: 44-118 921-5820

01/18/02

© 2002 Microchip Technology Inc.